LEVOLOR®

PREMIER™

Shutters Collection

Poly Shutters Installation Instructions
Manual & Smart Shutters



24-0025-120 February 2025

CONTENTS

GETTING STARTED

Installation Overview 3
Unpacking 3
Tools and Materials Needed 3
Fasteners 4

FRAME ASSEMBLY

Assemble the Frame 8

INSTALLATION

Standard Panel Systems 5
Hang Strip Installation 12
Bi-Fold Track Systems 16
Bypass Track Systems 20
French Door Shutters 27
Corner Windows 29
Bay Windows 30
Unframed Specialty Shapes 34
Framed Specialty Shapes 32
Arch Top and Angle Top Panels 33
Finish Work 36

OPERATION 39

CARE 40

TROUBLESHOOTING 41

SMART SHADE AUTOMATION OPERATION 47

SMART SHADE AUTOMATION TROUBLESHOOTING 51

WARRANTY 57

GETTING STARTED

LEVOLOR® PREMIER™ Poly Shutters are built using the highest quality materials. When properly installed, these shutters will provide a lifetime of beauty and performance.

IMPORTANT: These installation instructions are intended for professional installers who have been certified after attending LEVOLOR PREMIER shutter training.

Installation Overview

Panel shutters come in many configurations — individually hinged, bi-fold panels, with and without T-posts, track systems comprised of one or multiple panels, and with a variety of frames for inside or outside mounting.

Whatever the configuration, installation procedures are basically the same. The frame is assembled and fastened to the window at two points. Then the shutter panels are individually installed, racked, and the frame attachment is completed. Panel Lock adjustment or magnet mounting, caulking and other finish work complete the installation.

Unpacking

Carefully unpack the shutters. The package will include:

- Shutter panels
- Disassembled frames (frames for specialty shapes are typically assembled)
- Miscellaneous hardware (hinge pins, button plugs, etc.)

Tools and Materials Needed

Tools

- Flat blade, Phillips, and Robertson #1 and #2 screwdrivers
- Power drill and drill bits, including a 2" drill bit extension
- Rubber mallet
- Miscellaneous tools for non-typical installations (jig saw, hack saw, Dremel® tools, etc.)
- Measuring tape
- Level
- Awl

Materials

- Canvas drop cloth large enough for unpacking and frame assembly
- Clean fabric cloth and a mild cleaning spray solution
- Shim materials
- Finishing supplies (caulk, sealant, etc.)
- Instant adhesive for frame miters
- Silicone adhesive or doubled-sided tape for Decorative Sill Cover installation

Fasteners

Screws of varying lengths and types are required to install shutters. The chart below shows the standard fasteners, what each is used for, and the tool or driver needed to secure them. Other types of fasteners may be needed if mounting into concrete, metal, or similar surfaces.

#8 x 3" Washer Head Screw 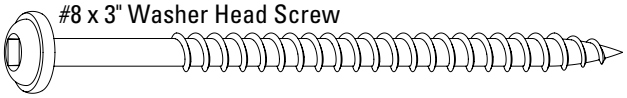	Installation screw #2 Robertson drive
#8 x 2" Pan Head Screw 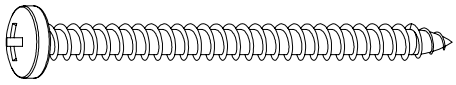	Attaches Bi-Fold or Bypass bracket to wall #2 Phillips drive
#8 x 1½" Pan Head Screw 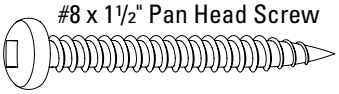	Installation screw; also used to attach valance clips to frame #2 Robertson drive
#8 x 1" Pan Head Screw 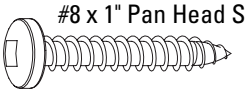	Attaches Bi-Fold/Bypass track to frame or opening, as well as track system brackets to frame #2 Robertson drive
#8 x ¾" Flat Head Screw 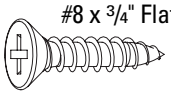	Attaches Bi-Fold pivot bracket to frame #2 Phillips drive
#6 x 1¾" Round Head Screw 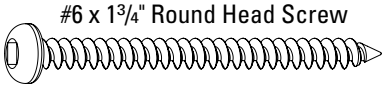	Attaches T-Post blocks and T-Post to frame #1 Robertson drive
#6 x ¾" Round Head Screw 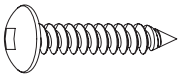	Attaches magnets, as well as T-Post brackets to T-Post and sill or frame, and Bi-Fold/Bypass carrier hardware to panels #1 Robertson drive
#6 x ½" Pan Head Screw 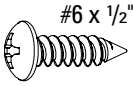	Attaches Bi-Fold bottom track pivot bracket to bottom track #2 Phillips drive
#6 x ⅝" Flat Head Screw 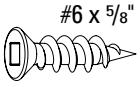	Attaches hinges to frames and T-Posts, as well as magnet strike plates to panels #1 Robertson drive
#6 x ½" Flat Head Screw 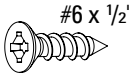	Attaches metal brackets to frame Combination #2 Phillips/#1 Robertson drive

Assemble the Frame – Panel Systems

Prepare the work area. Lay the shutter panels on a drop cloth face up just as they will appear in the window. Then follow the procedure below.

1. Lay the side frames beside the panels, so that the panel hinges are above the frame hinges. If one or more T-posts are used, lay them in the proper position.

NOTE: If hinges were ordered unattached, attach them to the frame and panels as shown below before proceeding.

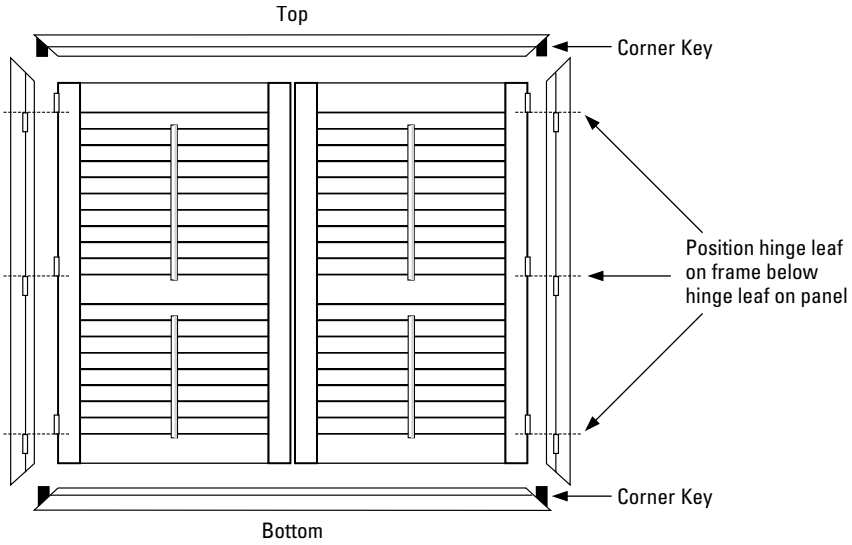

2. Insert the plastic corner keys into the ends of the top and bottom frames.
   - ➤ The Deluxe Casing Frame, Colonial Z-Frame, Classic Z-Frame, Modern Z-Frame, and Standard Z-Frame receive both the corner keys and metal brackets.
   - ➤ Insert the side frame pieces onto the corner keys of the top frame**.**
   - ➤ Tap the mitered frame corners with a rubber mallet to ensure that the corner keys are fully seated, and to pull the miters tightly together.

IMPORTANT: With outside mount L-frames that have no T-posts, glue the corner keys in position as described in the next step on page 5.

IMPORTANT: Be sure the frames match before gluing. The corners cannot be detached after the adhesive has set.

3. **Outside mount L-frames with no T-posts:** Glue the corner keys in position as illustrated. This prevents the frame from bowing.
   - ➤ First remove the tabs off the corner key with a flat blade screwdriver. The L-frames have no corner key punch. The tabs must be removed from the corner keys to prevent distorting the frame.
   - ➤ Then apply a small amount of instant adhesive or contact cement to the inside of the frame.
   - ➤ Insert the corner key into the end of the frame and hold firmly until set.

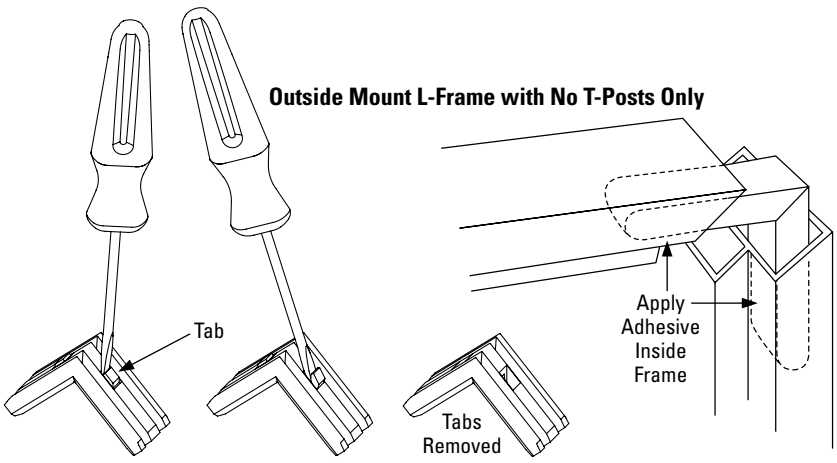

4. With the Casing Frame, Standard Casing Frame, Colonial Z-Frame, raditional Z-Frame, Bullnose Z-Frame, Deluxe Z-Frame, and Standard Z-Frame, secure the top frame metal brackets to the side frames using the provided screws.



5. **Frames with T-posts:** Attach the T-post to the **top frame**.

- ➤ T-post blocks will be pre-attached to the top and bottom frame pieces.
- ➤ Slide the T-post onto the T-post block on the top frame piece and secure the T-post to the block using a #1 Robertson bit to drive the provided bugle head screw.

IMPORTANT: A long driver bit is required to get enough access to drive the screw.

NOTE: If T-post blocks were not provided, or for three-sided frames, or for inside mounts with no frames, see step 8 on page 7.

6. Attach the bottom frame to the side frames and T-post, repeating the methods described in steps 2 through 5.

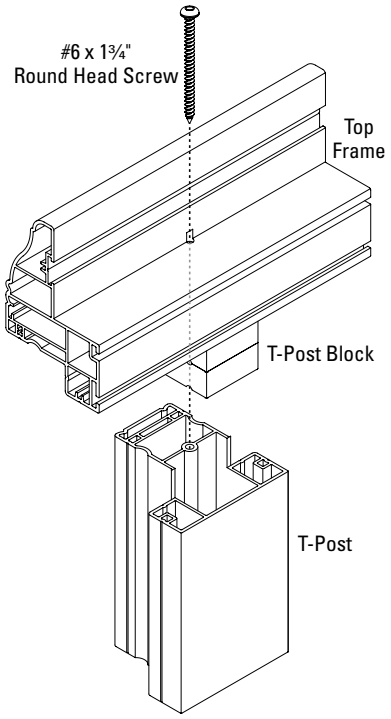

7. **Casing Frame, outside mount Casing Sill/Decorative L-Frame, Standard Casing Frame, outside mount Standard Casing Sill/Designer L-Frame, and outside mount L-Frame only:** If build-out is needed for additional clearance, install the build-out onto the back of the frame.

- ➤ The build-out snaps onto the back of the frame.

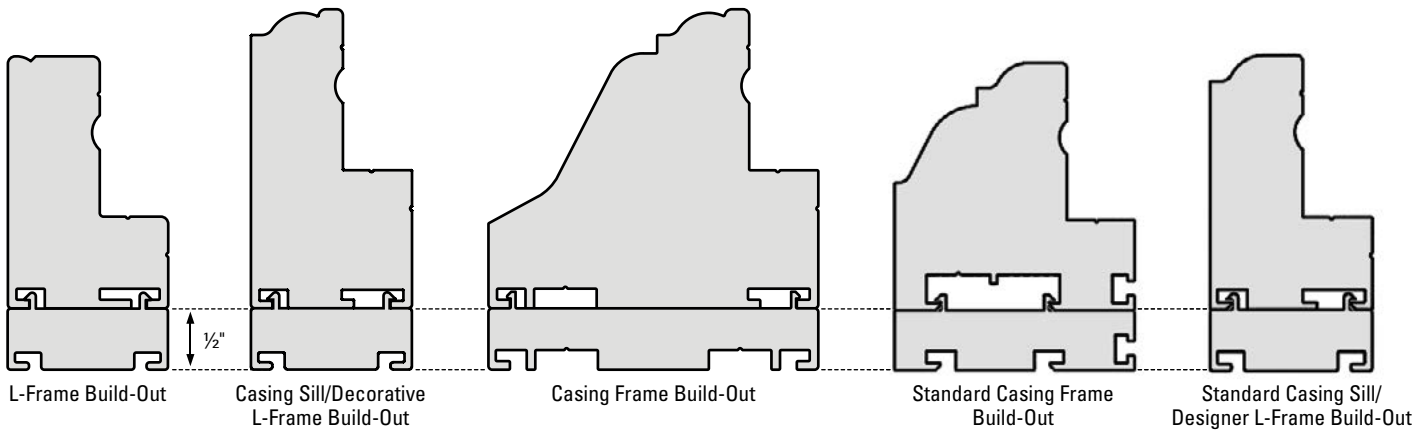

8. With 3-sided frames or inside mounts with no frame, T-post brackets are used to attach the T-post to the sill or casement after the frame has been installed. Refer to the illustration below.

- ➤ Attach the brackets to the sill or casement using the slotted hole on the bracket to allow for side-to-side adjustment.
- ➤ Be sure to square the T-post before tightening the brackets.
- ➤ T-post brackets can also be used to attach T-posts to frames when T-post blocks are not provided.

IMPORTANT: When a Decorative Sill Cover is used, it must be placed between the window sill and T-post before attaching the T-post.

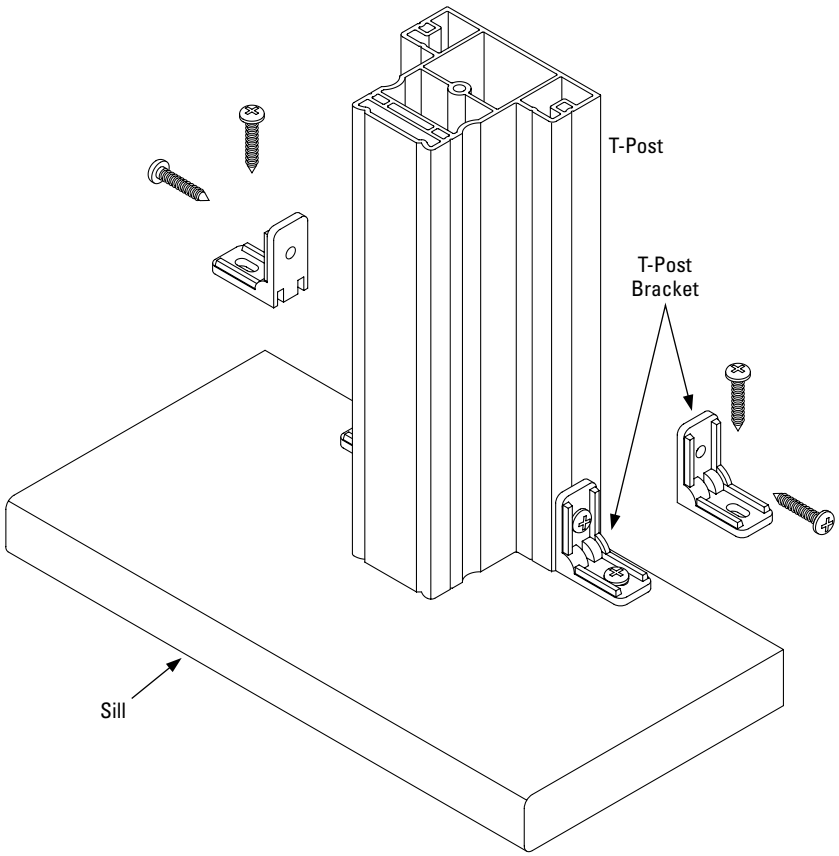

Assemble the Frame – Track Systems

Prepare the work area. Lay the frame pieces on a drop cloth in their proper orientation. Then follow the procedures below.

1. Align the track support spacers in the channels at either end of the top frame, flush with the ends of the frame. Use the four screws to attach the top frame and the track support spacers to the side frames.
   ➤ With four-sided systems, attach the bottom frame to the side frames in the same way.
2. If build-out is needed for additional clearance, secure the build-out onto the back of the frame with screws, as shown below.

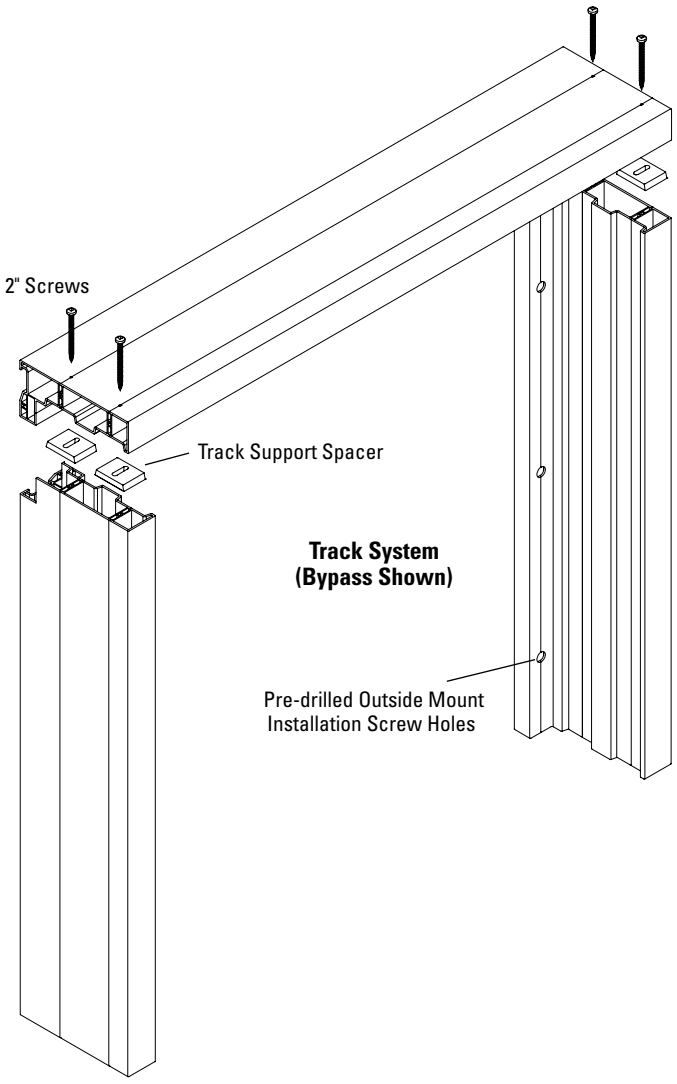

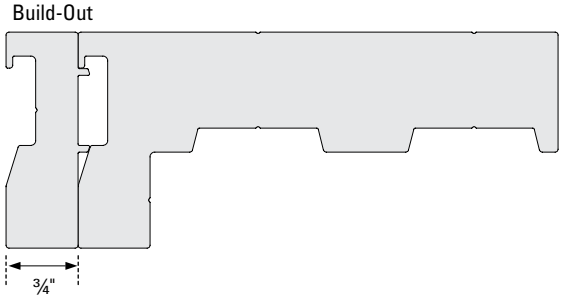

Framed Standard Panel Systems

NOTE: If a Decorative Sill Cover was ordered, refer to page 35.

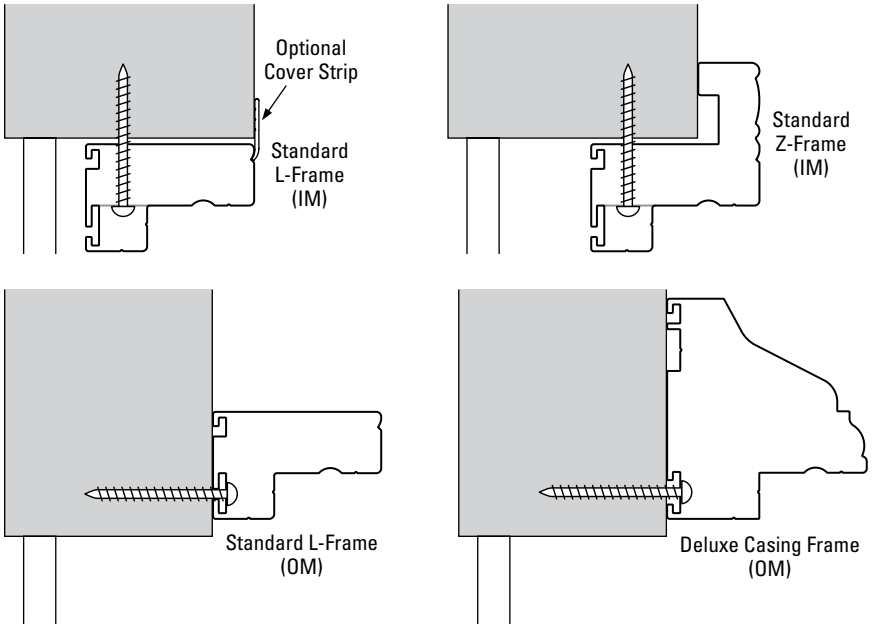

Step A. Install the Frame

1. Position the frame for mounting.

- ➤ **Outside (OM) Mount.** Center the frame over the opening. There should be a ¼" reveal on all four sides (or an equal reveal if a larger or smaller reveal was specified on the original order).
- ➤ **Inside (IM) Mount.** Center the frame in the opening. Insert temporary shims between the shutter frame and the window to hold the frame centered.

2. Attach the **side frames** at the top corners through the pre-drilled holes.

IMPORTANT: Tighten the screws snugly, but *do not* overtighten.



Step B. Mount the Panels

1. First, retract the Panel Locks on the top and bottom of the panels.
   - ➤ The Panel Lock system is designed to help level the panels within the frame. Retracting the locks makes it possible to rack the shutter.
   - ➤ Rotate the wheel of the Panel Lock until the square hole is visible.
   - ➤ Insert a flathead screwdriver into the square hole, then push in and rotate the plunger assembly 180° clockwise to retract it.

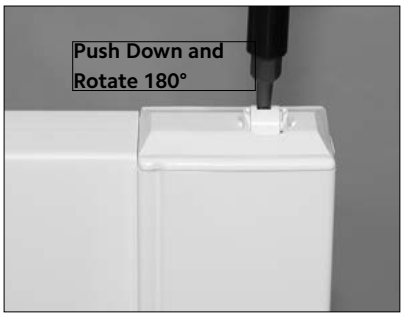

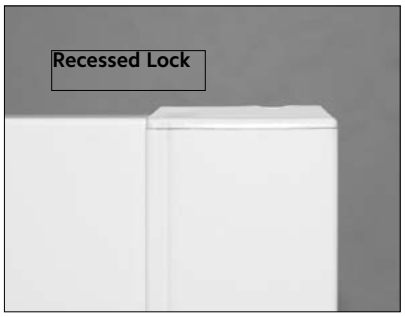

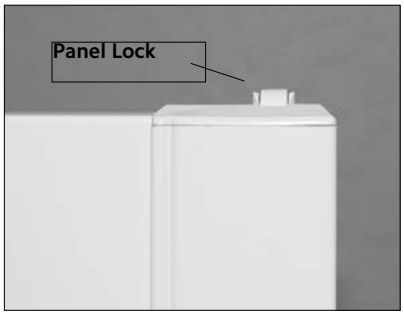

2. Align the panel and frame hinges, and insert the hinge pins.
3. Close the panels and check for proper alignment.
   - ➤ If panels are misaligned, rack the shutter by grasping the frame at the bottom corners and moving it from side to side until proper alignment is achieved.

NOTE: In the following procedures, after each fastener is placed, close the panels and check the alignment. If the alignment is lost, remove the fastener, re-align the panels, and then re-install the fastener.

IMPORTANT: For installations with multiple T-posts, it is recommended that you begin your racking at the center-most section and work your way out to each end.

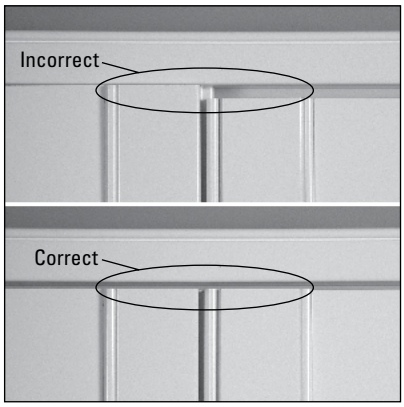

4. Hold the frame in the aligned position.
   - ➤ **Outside (OM) Mount.** Use a fastener to secure the center of the bottom frame. Check alignment, and then secure the side frames at the bottom corners.
   - ➤ **Inside (IM) Mount.** Use fasteners to secure the side frames at the bottom corners.



5. Insert screws into the remaining holes and check that the panels are still aligned after each screw has been tightened. Re-adjust if necessary.
6. To release the Panel Lock assemblies, insert a #2 Robertson bit into the square hole on the wheel, then rotate 180° counterclockwise to extend it. Repeat until desired height has been achieved.
7. Close the panels and, if needed, adjust the Panel Locks with a Robertson screwdriver as described on page 10., so that all doors close easily, yet stay firmly shut.
   - ➤ If necessary, install panel lock ramps on the sill or casement as shown on page 36.
   - ➤ If necessary, install magnets and strike plates as shown on page 37.
8. Perform any other necessary finish work to complete the installation as shown on page 38.

NOTE: If it is necessary to drill more installation holes in the frame, drill ⅜" holes through the first layer of vinyl only**.** Drill through the light block for both inside and outside mounts.
For sample drilling locations, see the illustrations in "Framed Standard Panel Systems" on page 9.

Standard Panel Systems with Hang Strip

NOTE: If a Decorative Sill Cover was ordered, refer to page 35.

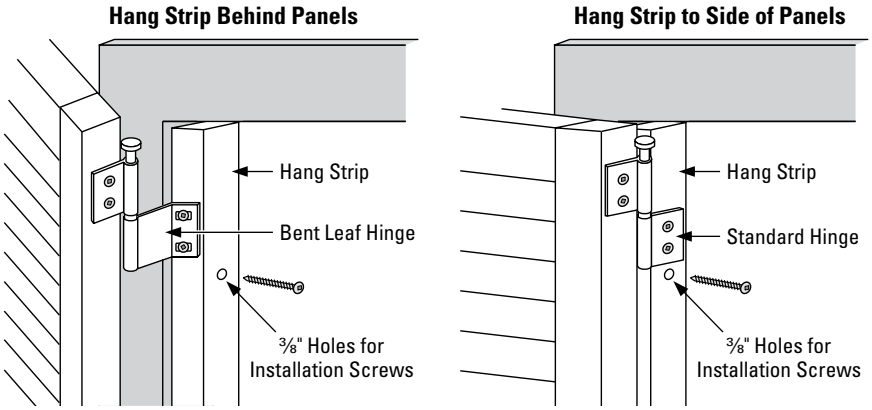

Step A. Install the Hang Strips

- Attach the side hang strips inside or outside the opening.
  - With outside mounts, be sure the hang strips are positioned the correct width apart and at the correct height.
  - Insert an installation screw into the top and bottom holes only, then set the screws into the mounting surface.
  - Tighten the screws snugly, but do not overtighten.

Step B. Mount the Panels

1. Hang the panels by fitting the pin end of the hinges into the hinge barrels.
2. Square and align the panels to the opening.
   - ➤ **Hang Strip Behind Panels.**
     If necessary, adjust the bent-leaf hinges by loosening the hinge screws and moving the hinge left or right.
   - ➤ **Hang Strip to Side of Panels.**
     If necessary, place hinge shims between the hinge and hang strip.
   - ➤ Re-tighten the hinge screws once the panels are square and aligned.
3. Insert screws into the remaining holes and check that the panels are still level after each screw has been tightened. Readjust if necessary.
4. With inside mounts, install Panel Lock ramps as indicated on page 36.
5. With outside mounts, install magnets and strike plates as indicated on page 37.
6. Perform any other necessary finish work to complete the installation as indicated on page 38.

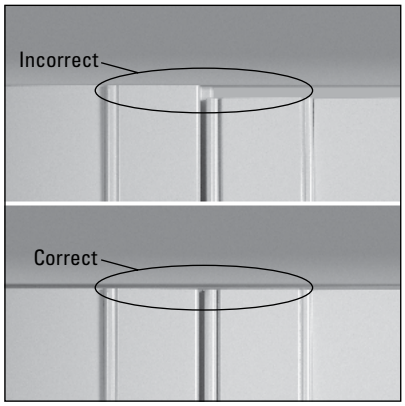

Unframed Standard Panel Systems

Unframed inside-mounted shutters may be installed flush with the opening or projected out from the opening using extended leaf hinges, which are ⅝" wider.

NOTE: If a Decorative Sill Cover was ordered, refer to page 35.

Step A. Install the Bottom Leaf of the Top Hinge

1. Position the left panel in the opening so that it has equal clearance at the top and bottom. Mark where the bottom of the top hinge is located.
2. Align the top of the bottom leaf with the mark and attach it using one screw.
3. To check for accurate placement, install the panel by its top hinge, inserting a hinge pin to hold the panel in place. Adjust placement of the hinge, if necessary.
   ➤ If placement is accurate, remove the panel and install the second screw into the bottom leaf of the top hinge.

Step B. Install the Bottom Leaf of the Bottom Hinge

1. With the panel placed in the top hinge, mark where the bottom of the bottom panel hinge is located.
2. Align the top of the bottom leaf of the hinge with the mark and attach it using one screw.
3. To check for accurate placement, install the panel into the two hinges. Adjust placement of the bottom hinge, if necessary.
   ➤ If placement is accurate, install the second screw into the bottom hinge.
4. Repeat steps A and B for the right panel, if applicable. Be sure to align the right panel to the left panel.

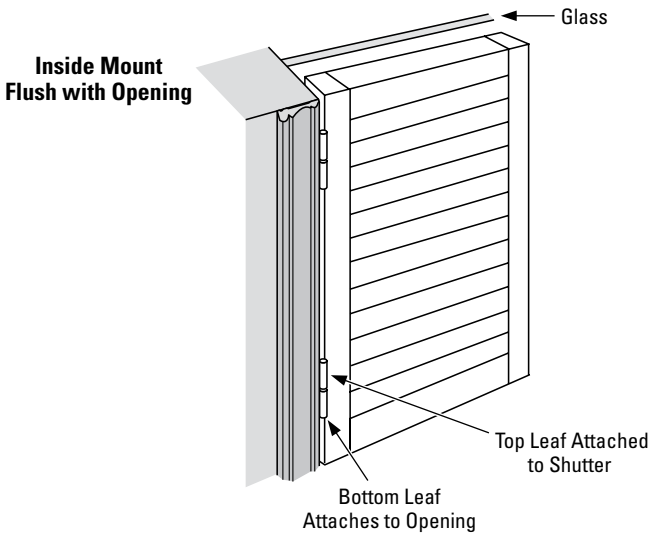

Step C. Install the Remaining Bottom Leafs of the Hinges

1. Once the panels are level and square in the opening, install the remaining bottom leafs while the panels are hanging.
   - ➤ Open the panels and install the bottom leafs onto the top leafs using the hinge pins.
   - ➤ Screw the bottom leafs in place.
   - ➤ If necessary, shim using the provided hinge shims.
2. Install Panel Lock ramps as indicated on page 36. For magnets and strike plates, see page 37.
   - ➤ When the panel lock system is used, the plunger may be adjusted using a Robertson screwdriver as described on "Step B. Mount the Panels" on page 10, if minor support or leveling is required.
3. Perform any other necessary finish work to complete the installation (see "Touch-Up and Inspection" on page 38).

Bi-Fold Track Systems

Typically, Bi-Fold track systems have three-sided frames; however, they may also be two-sided or four-sided. The basic installation procedure is the same whatever the configuration.

NOTE: If you haven't already assembled the Bi-Fold Track Frame, refer to "Assemble the Frame – Track Systems" on page 7.

Step A. Prepare the Frame

1. Installation screw holes are pre-drilled. If you need additional attachment points, drill ⅜" holes in the frame **through the first layer of vinyl only.**
   - ➤ **Outside (OM) Mount:** Drill through the score indicator groove on the light stop. The top frame should be mounted into studs wherever possible (unless mounting into the header).

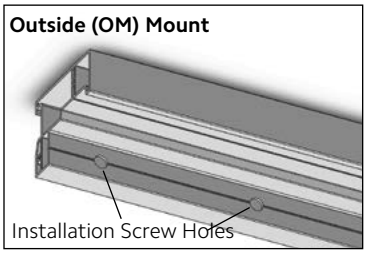

   - ➤ **Inside (IM) Mount:** Drill through the track channels for the top frame and light stop for the side frames.

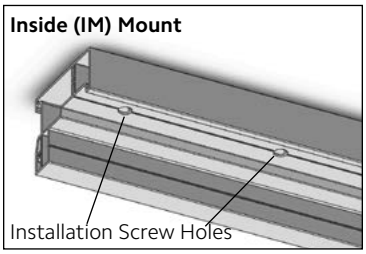

2. If an aluminum track is attached to the top frame, remove it before proceeding.

Step B. Install the Frame

IMPORTANT: Tighten the mounting screws snugly, but do not overtighten.

Inside Mount

1. Center the frame in the opening.
2. Using the provided screws, attach the top of the frame to the opening and level. Use shims as needed to ensure a level installation.
3. Secure the pivot side frame, using a level to make sure the frame piece is plumb. Again, use shims as needed.
   - ➤ If there are two pivot sides (split stack), secure only **one** of the side frames.



Outside Mount

1. Center the frame over the opening at the desired height.
2. Attach the **top frame** first, starting with one fastener at the highest corner.

   IMPORTANT: Install all mounting screws into studs or the window header.
3. Place a four foot level on the top frame and secure the second fastener in the top frame at the other corner, ensuring the top frame is level.
4. Finish attaching the top frame by securing one screw at each stud, 16" to 24" apart, depending on the type of construction.
   - ➤ Space screws no more than 30" apart if mounting into the header.
5. Secure the pivot side frame, using a level to make sure the frame piece is plumb. Again, use shims as needed.
   - ➤ If there are two pivot sides (split stack), secure only **one** of the side frames.

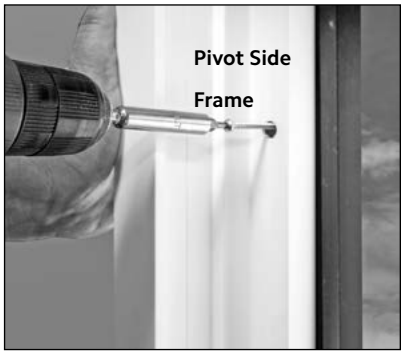

Step C. Attach the Aluminum Track to the Frame

1. Before attaching the track, make sure that you have inserted the correct number of carriers and top pivot pins. For one-way operation, one pivot pin and one snubber are required. For split operation, two pivot pins are required, but no snubber.

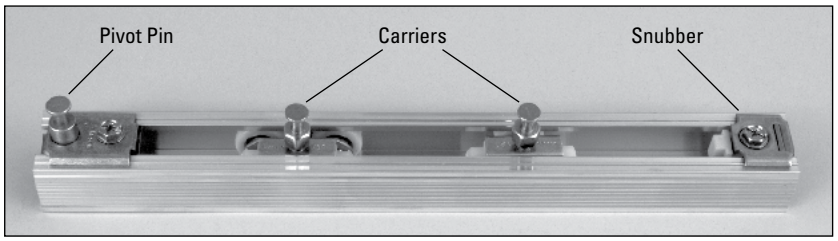

IMPORTANT: Carriers have three wheels. It makes no difference whether they are loaded into the track with one wheel to the front or two wheels to the front.

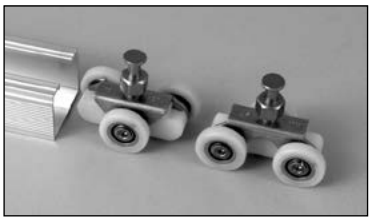

2. After inserting the carriers, check that the carrier heights are the same as the pivot pin height, as shown below. Adjust as necessary.

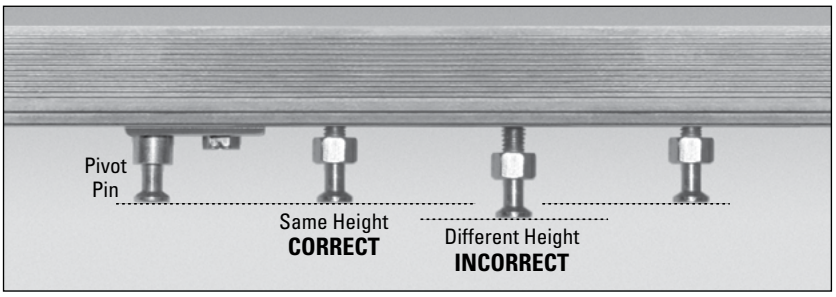

3. If the track arrived attached, use the same holes and re-attach the aluminum track to the top frame with the screws supplied. Be sure the holes line up correctly.

➤ If the track did not arrive attached, place the track within the light stop channel and align the track screws.

Step D. Attach the Shutter Panels

1. Set the pivot pin(s) in the track so that the center of the pivot pin is 1⅝" from the side frame.

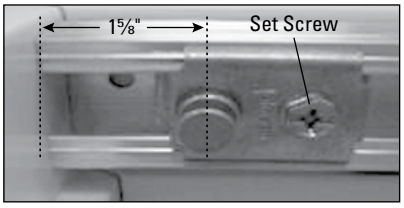

2. Mount the bottom pivot bracket(s) or floor guide with bottom pivot(s).

   IMPORTANT: The pivot pin receiver(s) must be directly under the top pivot pin(s). The center of the pivot pin receiver(s) should be 1⅝" from the side frame(s).

   - **Bottom Pivot Bracket.** Mount the bottom pivot bracket(s) centered on the screw indicator groove in the side frame(s).
   - **Floor Guide with Bottom Pivot.** Insert the bottom pivot(s) into the floor guide and tighten the screws with the pivot pin receiver(s) in the correct position. Attach the floor guide to the floor, centered on the screw indicator groove in the side frame(s).

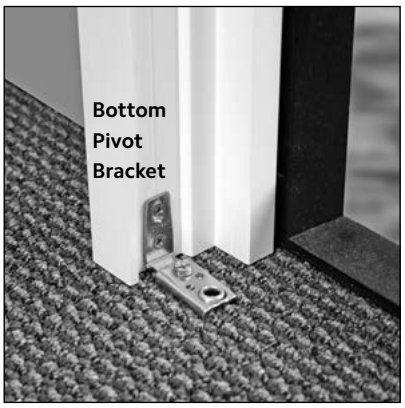

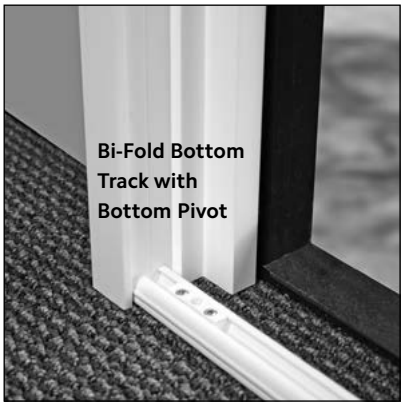

3. Mount the first panel per side into the bottom pivot pin receiver first and then onto the top pivot pin. Rotate the lever on the receiver to lock the top pivot pin in place.
   - When both sides have pivot pin receivers, install the first panel on the other side as well.
   - If adjustment is necessary, mark the correct position of the top and/or bottom receiver(s) to correctly reposition the component(s).
4. Insert the remaining shutter panels into the hinges and receivers.
   - Using labels and hinges for correct panel positioning, lock all panels into place by rotating the lever on the receiver.
   - If panels are uneven, make any minor adjustments with the carrier bolts.

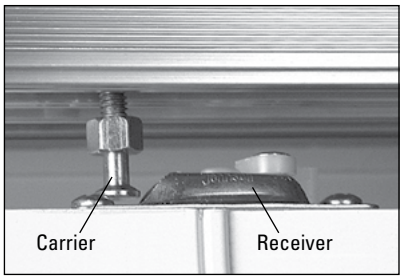



Step E. Finalize the Adjustment

1. **For one-way operation:** Close the panels and locate the unsecured frame so that the snubber contacts the panel and the panel fits into the light stop channel. Secure the frame in this position.
2. **For two-way operation:** Hold the loose side frame so the center split panels come together. Then adjust the carriers, if necessary. Finally, mark the position of the side frame and secure it.

Step F. Attach the Optional Valance

IMPORTANT: Two valances are available, the Bi-Fold Standard Valance (2½") and the Decorative Valance (5"). Both are mounted in a similar manner.

1. Attach the valance returns.
   - ➤ Remove tabs from corner keys as described on page 4.
   - ➤ Apply a small amount of instant adhesive or contact cement to inside of mitered corners of valance.
   - ➤ Insert the corner key into the end of the valance and hold firmly until set.
   - ➤ Glue and attach the valance returns.
2. The supplied valance clips will correctly position either valance to allow proper clearance for operation of the panels.
3. Align the valance clips with the pre-drilled installation holes on the face of the Bi-Fold Frame, and secure with the supplied #8 x 1" Truss Head screws.

   NOTE: Valance clips should be mounted with the clear plastic insert facing outward, and the release button pointing downward, as shown in the photo on page 19. The valance clip mount allows for a 3⁄16" height adjustment if needed. To adjust, loosen the screw slightly, slide the valance clip up or down to desired position, then re-tighten the screw.
4. Position the valance so that the groove on the back is "hooked" over the catch on the tops of the valance clips, then "rock" the valance downward until the valance clicks into place.

   NOTE: The Decorative Valance has two grooves on the back. The bottom groove should be used for Bi-Fold Track Frame installations in order to allow proper clearance for panel operation.
5. If you need to remove the valance after installation, for each of the installed valance clips, reach up under the bottom of the valance and locate the clip, then press upward on the spring-loaded valance clip release button (shown below left), and "rock" the bottom of the valance outward to release.

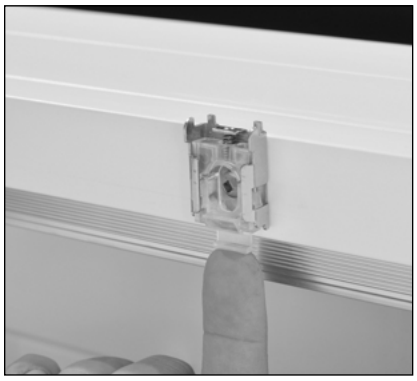



Step G. Complete the Installation

- Perform any necessary finish work to complete the installation as indicated onpage 38.

Bypass Track Systems

Typically, Bypass track systems have three-sided frames; however, they may also be two-sided or four-sided. The basic installation procedure is the same whatever the configuration.

NOTE: If you haven't already assembled the Bypass Track Frame, refer to page 7.

If installing the Bypass track system as an **Inside Mount Without Frame**, skip to "Step C. Attach the Tracks to the Frame" on page 21. After installing the carriers, set the tracks with 2¼" between centers to allow ⅝" between tracks.

Step A. Prepare the Frame

1. Installation screw holes are pre-drilled. If you need additional attachment points, drill ⅜" holes in the frame **through the first layer of vinyl only.**
   - ➤ **Outside (OM) Mount:** Drill through the score indicator groove on the light stop. The top frame should be mounted into studs wherever possible (unless mounting into the header).
   - ➤ **Inside (IM) Mount:** Drill through the track channels for the top frame and light stop for the side frames.
2. If aluminum tracks are attached to the top frame, remove them before proceeding.
3. **Outside mounts (OM) only:** Attach support brackets to the top of the frame.
   - ➤ Position the brackets where they will be mounted into studs. If stud spacing is 24", attach support brackets to each stud. If stud spacing is 16", attach the brackets to every other stud, so that they will be spaced 32" apart.
   - ➤ Screw the brackets into the frame at the screw indicator grooves, with the back of the bracket **flush with the back of the frame.**
   - ➤ Attach corresponding bracket cover.

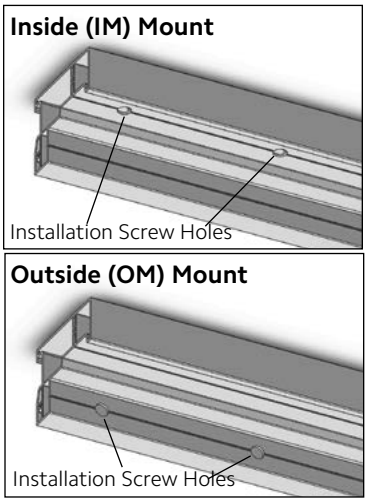

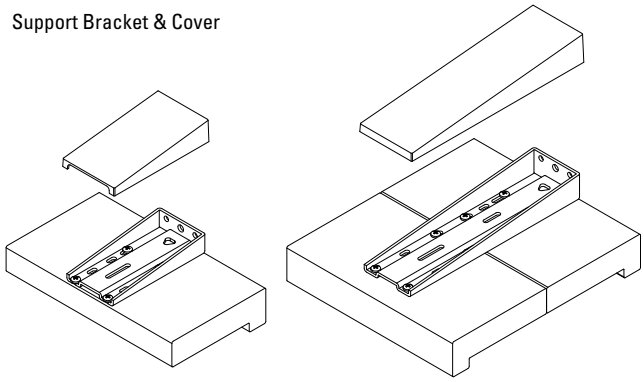

IMPORTANT: Be careful not to place support bracket screws where they will interfere with the track screws.
NOTE: Controlled Close for Bypass components come pre-installed on frames and panels. During installation, panel placement will be important to ensure engagement with the components. Panel configuration will need to be selected with care.





Step B. Install the Frame



IMPORTANT: Tighten the mounting screws snugly, but do not overtighten.

Inside Mount

1. Center the frame in the opening.
2. Using the provided screws, attach the top of the frame to the opening and level. Use shims as needed to ensure a level installation.

Outside Mount

1. Center the frame over the opening at the desired height.
2. Attach the **top frame** first, starting with one fastener at the highest corner.

IMPORTANT: Install all mounting screws into studs or the window header.

3. Place a four foot level on the top frame and secure the second fastener in the top frame at the other corner, ensuring the top frame is level.
4. Finish attaching the top frame by securing one screw at each stud, 16" to 24" apart, depending on the type of construction.
   - ➤ Space screws no more than 30" apart if mounting into the header.

Step C. Attach the Tracks to the Frame

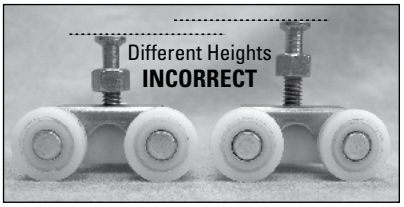

1. Before attaching the tracks, make sure that you have inserted the correct number of carriers (two carriers for each panel) into the appropriate track.
2. Prior to inserting the carriers, check that the carrier heights are consistent from carrier to carrier (see photos below). Adjust as necessary.
3. If the tracks arrived attached, use the same holes and re-attach the aluminum tracks to the top frame with the screws supplied. Be sure the holes line up correctly. If the tracks *did not* arrive attached:
   - ➤ **Standard Bypass:** Center the tracks within the light stop channels and secure with screws through the pre-drilled holes in the tracks.
   - ➤ **Open Louver Bypass:** Center the tracks within the two outer light stop channels, and secure with screws through the pre-drilled holes in the tracks.
   - ➤ **Bypass Triple Track:** Center the tracks within the three light stop channels, and secure with screws through the pre-drilled holes in the tracks.

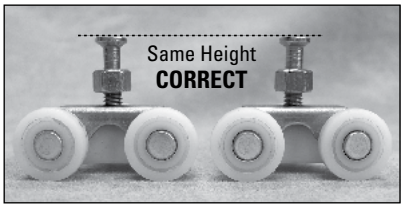

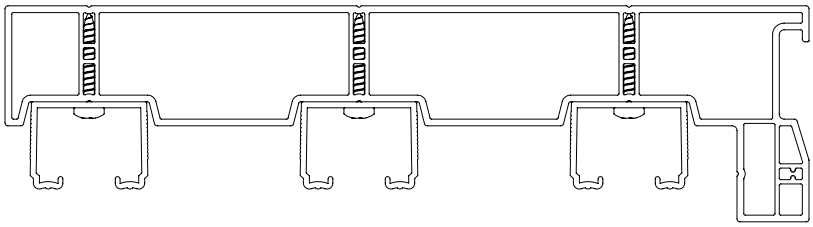

4. Use a Robertson #2 to adjust the Controlled Close for Bypass trigger screw so it engages with the damper. The head of the trigger screw is positioned such that the flat of the head contacts the damper latch flat section.



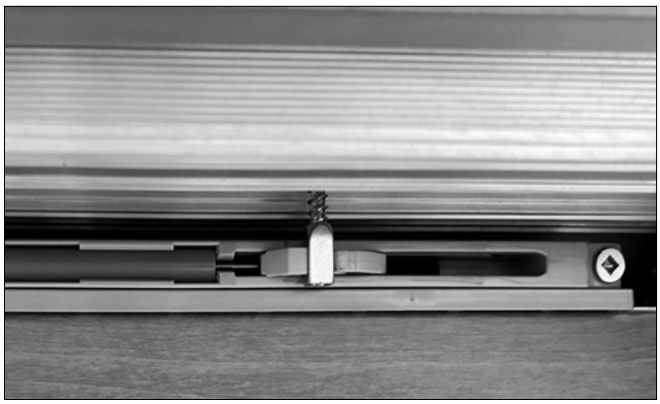

Step D. Prepare the Shutter Panels

IMPORTANT: If an optional bottom track or floor guide will be used, refer to "Step G. Install Optional Bottom Track or Floor Guide" on page 24 before proceeding. The Bypass Bottom Track and Hidden Panel Bypass Guide both require mounting components to the bottom of the shutter panels before they are hung from the carriers. In addition, any included privacy strips should be installed on the panels (before hanging them) as indicated on page 22.

NOTE: If the panels are Smart Home Automated, connect all power sources before continuing, as indicated on page 47.

1. **If optional Bypass Bottom Track or Hidden Panel Bypass Guide will be used:** Mount any required components to the bottom of the shutter panels before proceeding.
2. **Attach privacy strips.**
   - ➤ Remove the liner from the adhesive on the privacy strips.
   - ➤ Position the privacy strips on the panels as needed for the opening (see illustrations below).
   - ➤ Press each privacy strip firmly against the stile. Be sure to apply pressure at several places along the full length of the privacy strips.

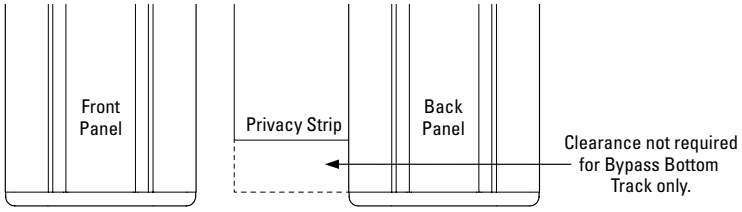

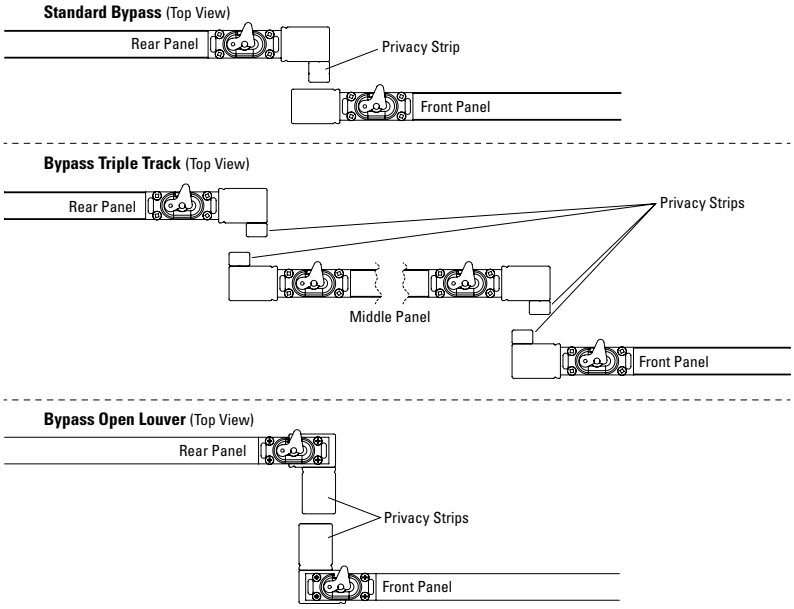

Step E. Mount the Shutter Panels

1. Mount the panels onto the carriers and lock them in place by rotating the lever on the receiver. Continue until all panels are secure.

   Double panels only: If panels are designed to be operated in pairs, be sure to hang them next to each other, with the hinges to the back, and the astragal to the front.

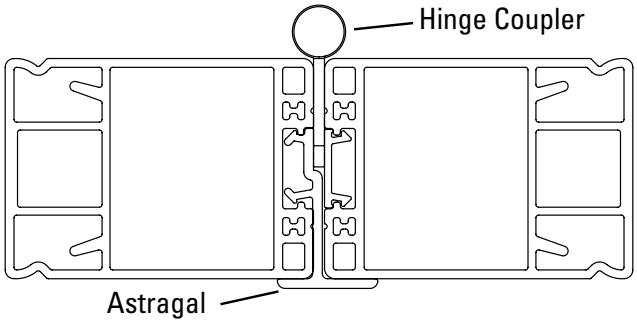

2. Check that the floor clearance is acceptable.If not, lower or raise the panels by adjusting both the carrier bolts the same amount.
3. For married panels, push the panels together and insert the hinge pins into the hinges located on the back side of the panels. This may require reaching between the louvers, or opening the door and approaching from the back of the shutter to reach the hinges.
4. Use a Robertson #2 to adjust the Controlled Close for Bypass trigger screw so it engages with the damper. The head of the trigger screw positioned such that the flat of the head contacts the damper latch flat section.



is

Step F. Check for Alignment

1. If necessary, adjust the carrier bolts so that all panels are at the same height.
2. Open the louvers of the back panel where panels overlap and slide the front panel until the stile is adjacent to or touching the open louvers. If gaps appear between the front panel stile and the open louvers at the top or bottom, adjust the carrier bolts until no gaps appear.

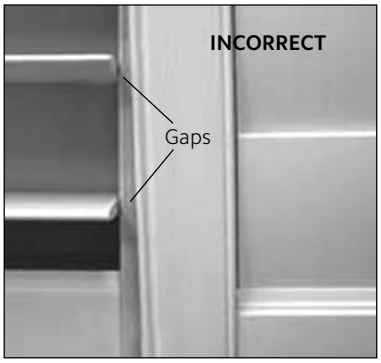

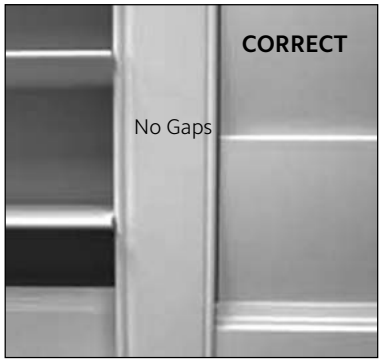

3. Finalize alignment by locating the side frames to their adjacent panel and secure to the wall with fasteners.

Step G. Install Optional Bottom Track or Floor Guide

Bottom tracks and floor guides prevent the shutter panels from swinging forward into the room or backward into the opening. There are one bottom track and two floor guide options for Bypass track systems.

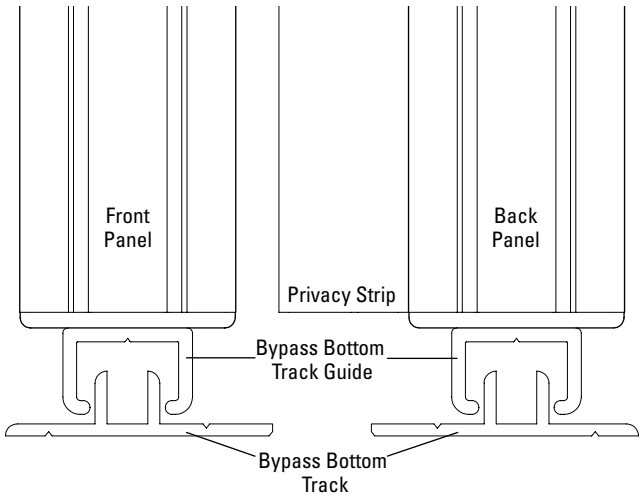

Option 1: Bypass Bottom Track

1. **Before mounting the shutter panels:**
   Center the Bypass Bottom Track Guide on the bottom of each panel and attach it using screws or double-sided tape.
   - ➤ Lay the panels flat, then attach the bottom track guide following the written location positions.
   - ➤ Once the bottom track or UL guide is attached, hang the panels.
   - ➤ After attaching the Bottom Tracks, align the Bottom Track Guides into the Bottom Tracks, as shown in the illustration above.

2. **After mounting the shutter panels:** Adjust both panels, making sure they are level with one another.
   - ➤ Align the bottom tracks with the light stop channels on the frame as shown above.

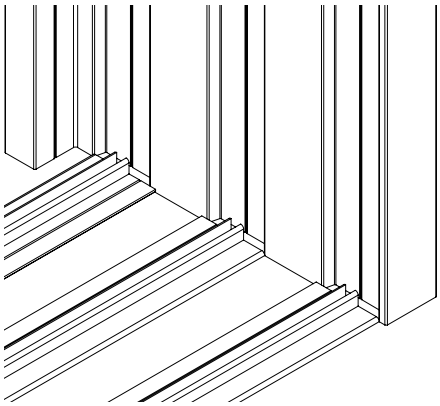

Bypass Triple Track shown

NOTE: An 11⁄16" panel height deduction is taken at the factory to ensure proper clearance.

Option 2: Hidden Panel Bypass Guide (UL-Guide)

1. **Before mounting the shutter panels:** Lay the panels flat, and attach the Front and Back Bypass Guides to the bottom of the shutter panels using screws or double-sided tape.

   NOTE: UL guides may need to be trimmed slightly before attaching to the panels.

➤ These hidden guides eliminate the need to attach anything to the floor.

➤ Attach the Front (U) Bypass Guide to the bottom of the **front panel(s)** as illustrated above. Position the front of the guide ⅛" from the front of the stile or flush with the front edge of the bottom rail.

➤ Attach the Back (L) Bypass Guide to the bottom of the **back panel(s)**. Position the rear of the guide ⅜" from the back of the of the stile or ¼" from the back edge of the bottom rail.

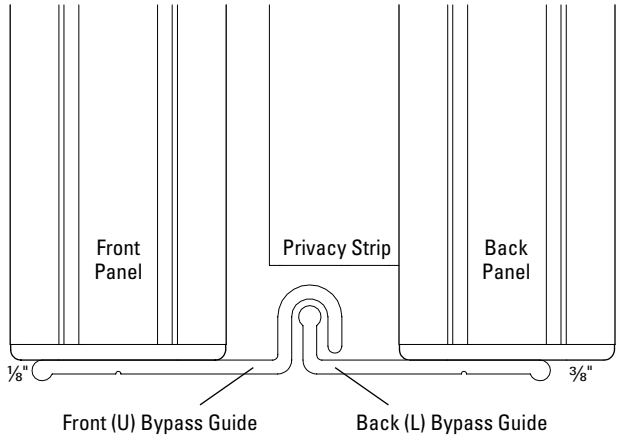

2. **When mounting the shutter panels:** Mount the back panel(s) first, then fit the Front (U) Bypass Guide over the Back (L) Bypass Guide when mounting the front panels.

   NOTE: A ½" panel height deduction is taken at the factory to ensure proper clearance.

Option 3: Floor Guide and Floor Guide Open/Triple

■ **After mounting the shutter panels:** Attach one or more Floor Guides to the floor. The Floor Guide will be sent with Standard Bypass systems; the Floor Guide Open/Triple will be sent with Bypass Open Louver and Bypass Triple Track systems.

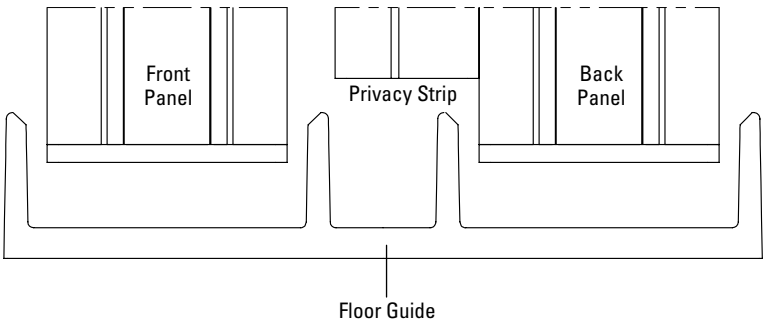

➤ Refer to the diagram for placement.

➤ Align the Floor Guide directly under the shutter panel overlap.

➤ Position so that each panel will always be over at least one Floor Guide.

➤ Secure to the floor using the supplied screws.

NOTE: A ½" panel height deduction is taken at the factory to ensure proper clearance.

Floor Guide Attachment – Top View

One Guide

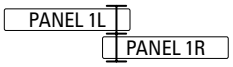

Two Guides

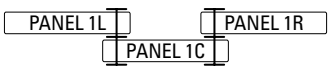

Three Guides

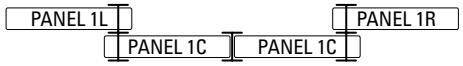

Step H. Attach the Optional Valance

IMPORTANT: Two valances are available, the Bypass Standard Valance (3½") and the Decorative Valance (5"). Both are mounted in a similar manner.

1. Attach the valance returns.
   - ➤ Remove tabs from corner keys as described on page 4.
   - ➤ Apply a small amount of instant adhesive or contact cement to inside of mitered corners of valance.
   - ➤ Insert the corner key into the end of the valance and hold firmly until set.
   - ➤ Glue and attach the valance returns.
2. The supplied valance clips will correctly position either valance to conceal the tracks and carriers.
3. Align the valance clips with the pre-drilled installation holes on the face of the Bypass Frame, and secure with the supplied #8 x 1" Truss Head screws.

   NOTE: Valance clips should be mounted with the clear plastic insert facing outward, and the release button pointing downward, as shown in the photo below. The valance clip mount allows for a 3⁄16" height adjustment if needed. To adjust, loosen the screw slightly, slide the valance clip up or down to desired position, then re-tighten the screw.
4. Position the valance so that the groove on the back is "hooked" over the catch on the tops of the valance clips, then "rock" the valance downward until the valance clicks into place.

   NOTE: The Decorative Valance has two grooves on the back. The top groove should be used for Bypass Track Frame installations in order to conceal the tracks and carriers.
5. If you need to remove the valance after installation, for each of the installed valance clips, reach up under the bottom of the valance and locate the clip, then press upward on the spring-loaded valance clip release button (shown below left), and "rock" the bottom of the valance outward to release.

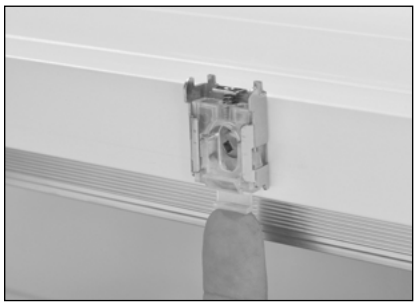



Step I. Complete the Installation

- ■ Perform any necessary finish work to complete the installation as indicated onpage 38.

French Door Shutters

French door shutters are mounted using the Standard L-Frame, Casing Sill/Decorative L-Frame, or Standard Casing Sill/Designer L-Frame; French door cut-outs use the Standard L-Frame only. Installation procedures for French door cut-outs vary slightly from those for full panel French door shutters. If you haven't already assembled the French door frame, refer to page 5.

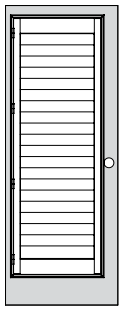

French Door Shutter (SH)

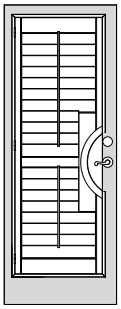

French Door Cut-Out (FDC)

Step A. Install the Frame

1. Center the frame over the opening. Be sure the corner keys have been glued into position as described on page 4.
   - ➤ Check that the overlap (if any) is the same in the middle, top, and bottom. This will ensure that the vertical line of the door will match the vertical line of the shutter.

   IMPORTANT: With French door cut-outs, make sure the cut-out is placed in the appropriate location to fit around the door hardware.
   - ➤ **French Door Shutters:** Secure the side frame next to the door knob. Place the first screw by the door knob, second screw near the top, and third screw near the bottom.
   - ➤ **French Door Cut-Outs:** Secure the cut-out side frame. Place the first screw in the top installation hole, second screw near the bottom, and third and fourth screws above and below the cut-out.
   - ➤ Tighten the screws snugly, but *do not* overtighten.

   IMPORTANT: Angle the screws to avoid breaking the glass. In addition, screw placement *must not* interfere with the door handle hardware and lock mechanisms.

   IMPORTANT: With French door cut-outs, if there is projecting trim around the door glass, a Full or Partial Trim Extension may have been added to the back of the frame. If a Partial Trim Extension is included, over-tightening the installation screws may cause the frame to twist inward. If this occurs, loosen the installation screws slightly until the frame is no longer twisted.

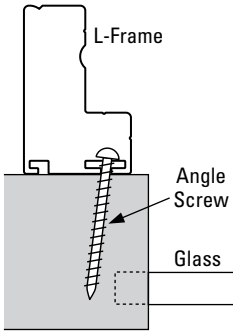

2. Most frames have pre-drilled holes for ease of installation. If additional installation holes are needed, drill ⅜" holes in the frame *through the first layer of vinyl only.*

Step B. Mount the Panels

1. If the shutter uses the Panel Lock system, first retract the Panel Locks on the top and bottom of the panels. Refer to the procedures in step 1 on page 10.
2. Place the panel into the frame by fitting the pin end of the hinges into the hinge barrels.

   IMPORTANT: Carefully support the frame while inserting the panel into the hinges. Use support under the hinged side of the frame to support the weight of the panel.

Step C. Racking and Securing

1. Close the panel and check for proper alignment.
   - ➤ If panels are misaligned, grasp the hinged side of the frame and rack up and down until proper alignment is achieved.
   - ➤ Open the panel and insert a screw above the top hinge in the pre-drilled hole.
   - ➤ Close the panel and check alignment. If misaligned, remove the screw and re-align.
2. Secure the bottom of the side frame through the pre-drilled holes.
3. Close the panel and adjust the center of the hinged side frame so that the gap between the other side frame and the panel is consistent. Mark the proper position of the frame, open the panel, and attach the frame through the pre-drilled hole.
4. Attach all remaining fasteners.

   IMPORTANT: With each fastener that is placed, close the panel and check the alignment. If the alignment is lost, remove the fastener, re-align the panel, and re-install the fastener.

Step D. Complete the Installation

1. To release all panel lock assemblies, insert a #2 Robertson bit into the square hole, then push in and rotate the plunger assembly 180° counterclockwise.
2. Close the panels and, if needed, adjust the Panel Locks with a Robertson screwdriver as described on page 10. This ensures all doors close easily, yet stay firmly shut.
3. If necessary, install magnets and strike plates as indicated on page 37.
4. Optional magnets may be installed above and below the cut-out if additional holding force is required for secure panel closure.

Magnet Installation for Cut-Out:

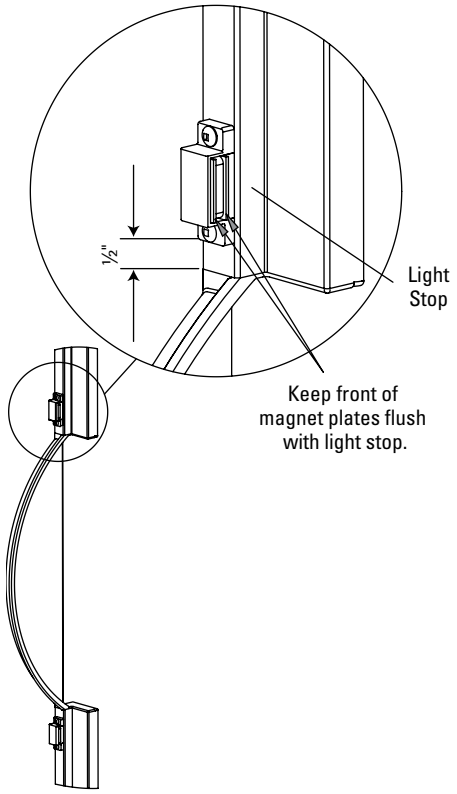

Strike Plate Installation for Cut-Out:

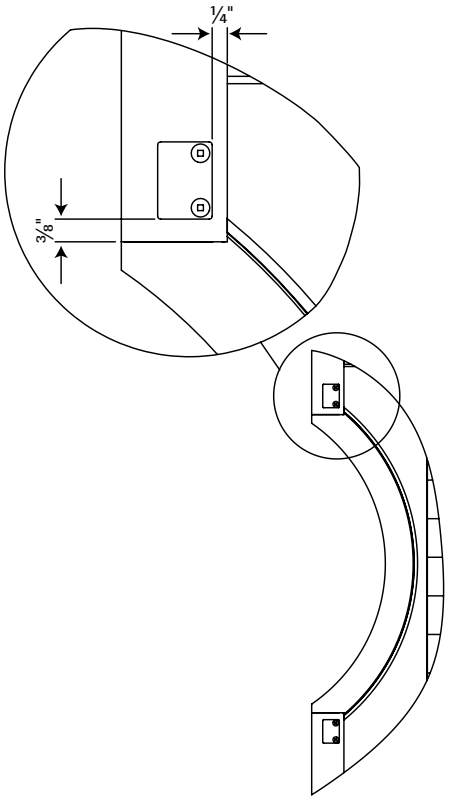

- ➤ Close the shutter panels to check function and closure.
- ➤ Adjust magnet or strike plate position, if necessary.

5. Open the panel and insert a screw above the top hinge in the pre-drilled hole. Perform any other necessary finish work to complete the installation as indicated on page 38.

Corner Windows

Corner window shutters are two framed shutters connected together at a 90-degree angle. Before performing a corner window installation, you should be familiar with the framed shutter installation procedures described on pages 8–10.

NOTE: If you haven't already assembled the shutter frames, refer to page 3.

Step A. Connect the Two Assembled Frames

1. Position the provided hang strip flush with the front of the right side of the left frame. Attach it with screws through the frame, on the screw indicator line.
2. Attach the left side of the right frame to the hang strip in a similar fashion.

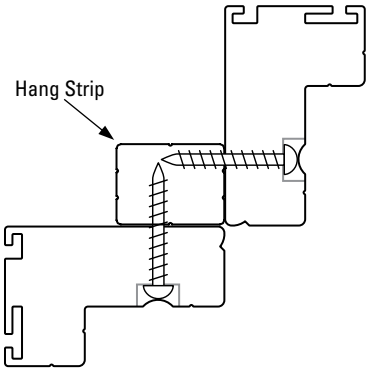

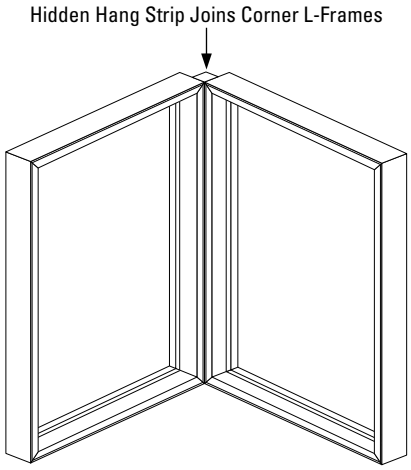

Step B. Install Frames (Inside or Outside Mount)

1. Center the attached frames (L-frame and Z/L-frame combinations) over or into the openings and even out your reveal.
2. Secure the top and bottom inside corners of the left and right frame.

Step C. Mount the Left Corner Panel(s)

1. First, retract the Panel Locks on the top and bottom of the panels. Refer to the procedures in step 1 on page 10.
2. Support the left side of the frame with support blocks (OM) or shims (IM) before inserting the panel(s).
3. Place the panel(s) into the left frame by fitting the pin end of the hinges into the hinge barrels.

Step D. Rack and Secure the Left Corner Panel(s)

1. After mounting the panel(s), close the panel(s) and check for proper alignment.
   - ➤ If misaligned, grasp the left side of the left frame at the top and bottom and move the frame up and down until proper alignment is achieved.
   - ➤ Mark the position of the frame on the wall and open the panel.
2. Attach the bottom of the frame through the pre-drilled holes. Be sure the frame lines up with your mark.
3. Close the panel(s) and check alignment.
4. Secure the balance of the frame. There should be one screw within 3" of each corner and no more than 30" between fasteners.

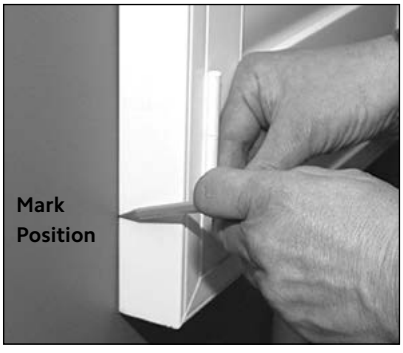

IMPORTANT: With each fastener that is placed, close the panels and check the alignment. If the alignment is lost, go back to the fastener, remove, realign, and reinstall.

Step E. Mount the Right Corner Panel(s)

- Repeat Step C for the right panel(s).

Step F. Rack and Secure the Right Corner Panel(s)

- Repeat Step D for the right panel(s).

Step G. Complete the Installation

1. To release all Panel Lock assemblies, insert a #2 Robertson bit into the square hole, then push in and rotate the plunger assembly 180° counterclockwise.
2. Close the panels and, if needed, adjust the Panel Locks with a Robertson screwdriver as described on page 4. This ensures that all doors close easily, yet stay firmly shut.
3. If necessary, install magnets and strike plates as indicated on page 37.
4. Perform any other necessary finish work to complete the installation as indicated on page 38.

Bay Windows

If you haven't already assembled the bay window shutter frames, refer to page 3.

Step A. Install the Middle Bay Frame (Inside or Outside Mount)

1. Center the frame of the middle bay over (OM) or into (IM) the opening.
2. Attach the top frame at the top corners with installation screws through the pre-drilled holes. Tighten snugly, but *do not* overtighten.

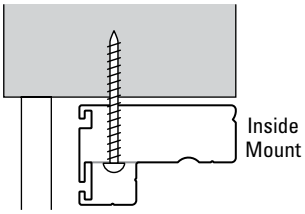

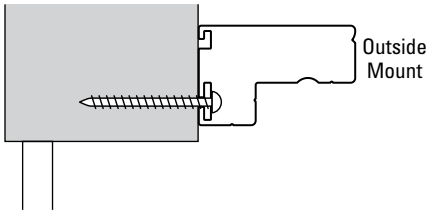

Step B. Mount the Middle Bay Panel(s)

1. First, retract the Panel Locks locks on the top and bottom of all panels. Refer to the procedures in step 1 on page 10.
2. Place the panel(s) into the middle bay frame by fitting the pin end of the hinges into the hinge barrels.

Step C. Rack and Secure the Middle Bay Panel(s)

1. After mounting the panel(s), close the panel(s) and check for proper alignment.
   - ➤ If misaligned, grasp the bottom frame and move it side-to-side until proper alignment is achieved.
   - ➤ Mark the position of the frame on the wall and open the panel(s).

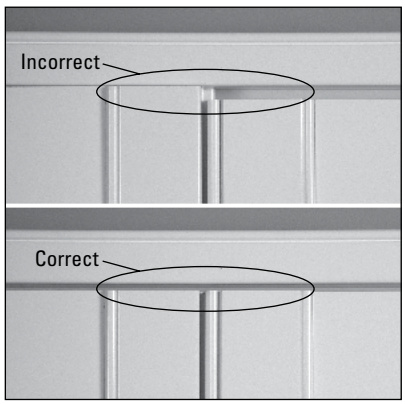



2. Attach the frame at the bottom corners, making sure the frame lines up with your mark.
3. Close the panel(s) and check alignment.
4. Secure the balance of the frame. There should be one screw within 3" of each corner and no more than 30" between fasteners.

IMPORTANT: With each fastener that is placed, close the panels and check the alignment. If the alignment is lost, go back to the fastener, remove, realign, and reinstall.

Step D. Install the Left Bay Frame

1. Align the right side of the left bay with the left side of the middle bay frame.

   IMPORTANT: Make sure that the tops are flush, and the bead edge of the butting L-frames are aligned properly and *do not* overlap.

2. Attach the top and bottom of the frame within 3" of the right corners.

Step E. Mount the Left Bay Panel(s)

1. Support the left side of the frame with support blocks (OM) or shims (IM) before inserting the panel(s).
2. Place the panel(s) into the left frame by fitting the pin end of the hinges into the hinge barrels.

Step F. Rack and Secure the Left Bay Panel(s)

1. After mounting the panel(s), close the panel(s) and check for proper alignment.
   - ➤ If misaligned, grasp the left side of the left frame at the top and bottom and rack the frame up and down until proper alignment is achieved.
   - ➤ If necessary, mark the position of the frame on the wall and open the panel.
2. Attach the frame at the left-side top and bottom corners, making sure the frame lines up with your mark.
3. Close the panel(s) and check alignment.
4. Secure the balance of the frame. There should be one screw within 3" of each corner and no more than 30" between fasteners.

IMPORTANT: With each fastener that is placed, close the panels and check the alignment. If the alignment is lost, go back to the fastener, remove, realign, and reinstall.

Step G. Install the Right Bay Frame

- Repeat Step D for the right frame.

Step H. Mount the Right Bay Panel(s)

- Repeat Step E for the right panel(s).

Step I. Rack and Secure the Right Bay Panel(s)

- Repeat Step F for the right panel(s).

Step J. Complete the Installation

1. To release all Panel Lock assemblies, insert a #2 Robertson bit into the square hole, then push in and rotate the plunger assembly 180° counterclockwise.
2. Close the panels and, if needed, adjust the Panel Locks with a Robertson screwdriver as described on page 10. This ensures that all doors close easily, yet stay firmly shut.
3. If necessary, install magnets and strike plates as indicated on page 37.
4. Perform any other necessary finish work to complete the installation as indicated on page 38.

Framed Stand-Alone Specialty Shapes

NOTE: If a Decorative Sill Cover was ordered, refer to page 35.

Stand-alone specialty shape shutters are installed independently of standard shutters.

1. Place the frame in or over the opening and center. Make sure the bottom frame is level.
2. Attach the frame with two screws through the curved portion of the frame.
   - ➤ Screws should be placed in the top left and top right of the curve as illustrated below.
   - ➤ *Do not* overtighten the screws — doing so could distort the shape.

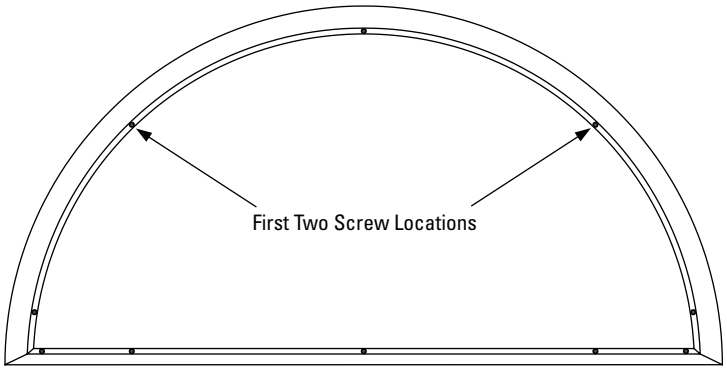

3. Place the panel into the frame by lining up the hinge barrels and inserting the hinge pins. Close the top and sides by depressing the specialty shape's Panel Lock spring-loaded plungers into the grooves in the frame.
4. Move the bottom of the frame left or right to create the proper gaps around the panel.
   - ➤ Mark the bottom frame location where the proper gaps are created.
   - ➤ Remove the panel from the frame.
5. Move the bottom frame to align it with the mark, and drive a screw through the middle of the bottom frame to hold it in the correct position.
6. Place the panel back into the frame and double-check that it fits properly.
7. Remove the panel from the frame and set all remaining screws, being careful not to overtighten.
8. Place the panel into the frame. Adjust plunger depth if necessary to provide a good fit in the frame.
   - ➤ If fit is too tight, push in on the plunger and rotate clockwise to retract the plunger.
   - ➤ If fit is too loose, push in and rotate the plunger counterclockwise to extend it.
9. Perform any necessary finish work to complete the installation as indicated on page 38.

Framed Specialty Shapes Over Standard Shutter

When a specialty shape is over a standard shutter, the bottom of the shape's frame is attached to the top of the standard shutter's frame. The standard shutter is always installed before the specialty shape.

NOTE: If a Decorative Sill Cover was ordered, refer to page 35.

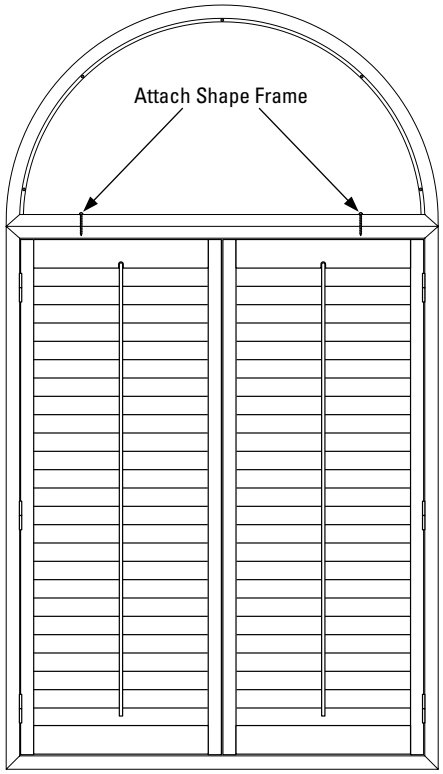

1. Place the frame in or over the opening. Align the bottom frame of the shape with the top frame of the standard shutter.
2. Set two installation screws through the bottom frame of the shape into the top frame of the standard shutter. Do not overtighten the screws.
3. Place the shaped panel into the frame by lining up the hinge barrels and inserting the hinge pins. Spring-loaded plungers on the shape snap into grooves on the frame.
4. Move the top of the shaped panel's frame left or right to create the proper gaps around the shape.
   - ➤ Mark the top frame location where the proper gaps are created.
   - ➤ Remove the shaped panel from the frame.
5. Move the top of the frame to align it with the mark, and screw through the top center to hold the frame in the correct position.
6. Place the shaped panel back into the frame and double-check that it fits properly.
7. Remove the shaped panel from the frame and set all remaining screws; do not overtighten.
8. Place the shaped panel into the frame. Adjust plunger depth if necessary to provide a good fit in the frame.
   - ➤ If fit is too tight, push in on the plunger and rotate clockwise to retract the plunger.
   - ➤ If fit is too loose, push in and rotate the plunger counterclockwise to extend it.
9. Perform any necessary finish work to complete the installation as indicated on page 38.

Unframed Specialty Shapes

Unframed specialty shape shutters are always inside mounted and attached with magnets.

NOTE: If a Decorative Sill Cover was ordered, refer to page 35.

1. Place the shaped panel in the opening and center it.
2. Mark the position of the left and right edges of the shape on the bottom of the opening.
3. Measure in from each mark ½", and make another mark. The second marks indicate where the outside edges of the magnets will be installed.

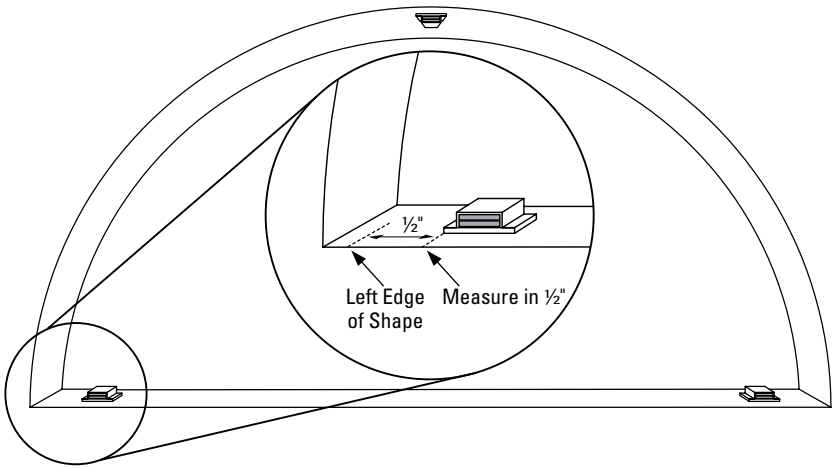

4. At the second set of marks, measure and mark 1⅜" back from the front edge of the opening. The front of the magnet will be located here.
   - ➤ Measure for magnet position at the top center of the shape in the same way.
   - ➤ If more than three magnets are provided, space them evenly in the opening.
5. Attach all magnets to the opening using the supplied magnet screws.
6. Attach strike plates to the shape so that they will align with the magnets when the shaped panel is installed.
7. Install the unframed specialty shape panel and center from side to side.
   - ➤ Check that each magnet makes good contact with the strike plates.
   - ➤ Make any necessary adjustments to magnets that *do not* hold securely.
8. Perform any necessary finish work to complete the installation as indicated on page 38.

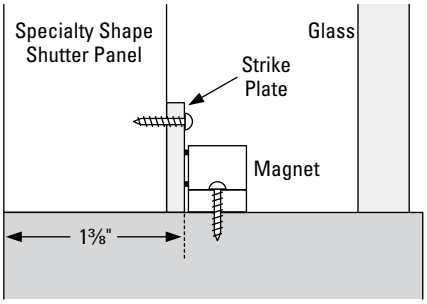

Decorative Sill Cover

For details about the Decorative Sill Cover, see the Poly Shutters section of the LEVOLOR® PREMIER™ Reference Guide.

1. Dry fit the Decorative Sill Cover before installing. Minor adjustments may be required.
2. For standard applications, the rear of the Decorative Sill Cover is flush with the back of the shutter frame.
3. Attach the Decorative Sill Cover. The following products may be used to secure it: silicone adhesive, caulk, double-sided tape, or screws that are concealed by the shutter frame. Select the method that is best for your installation.
4. If provided, attach light stop to the Decorative Sill Cover.
5. Outside mount applications may require a filler strip that should be attached to the inside bottom lip of the Decorative Sill Cover to fill the space between the sill cover and the wall.
6. For outside mount applications without an existing sill, attach a section of filler strip to the wall to provide a support or mounting surface for the Decorative Sill Cover.

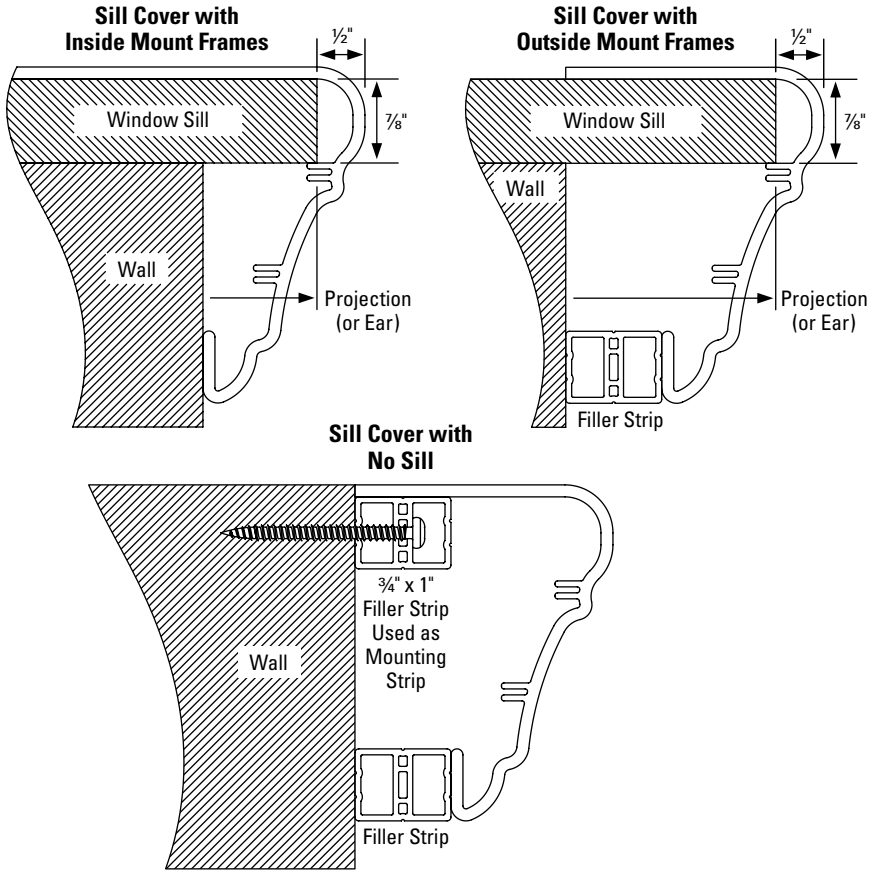

Finish Work

Install Panel Lock Ramp(s) (If Applicable)

The Panel Lock System with spring-loaded plunger is installed on panels and frames during fabrication. If your panel configuration is a 3-sided frame application, install panel lock ramps on the bottom sill. If a 2-sided frame, install the panel lock ramps on both the top and bottom sills.

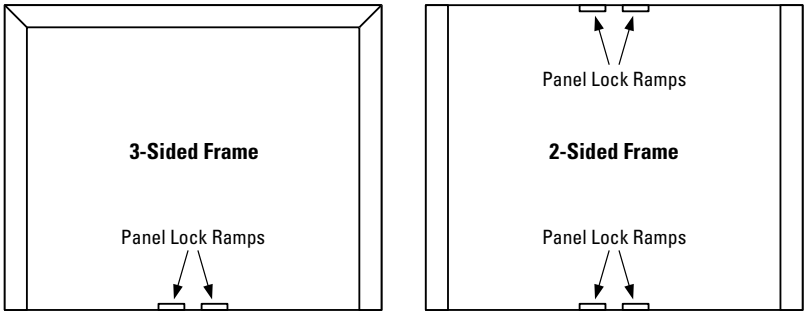

1. With the shutter panel(s) closed, make a pencil mark on the sill to show where the center of each spring-loaded plunger is located.
2. Mark where to drill pilot holes for the screws.
   - ➤ Open the shutter panel(s). Place the panel lock ramp on the sill with the sloped edge facing front. The front edge of the ramp should be ⅛" behind the front edge of the panel.
   - ➤ Center the panel lock ramp on the line marking the plunger location.
   - ➤ Mark the center of the ramp's screw holes. Repeat for all panel lock ramps.
3. Drill pilot holes for each panel lock ramp using a 3⁄32" drill bit.
4. Attach the panel lock ramps to the sill using the screws provided.
5. Close the shutter panels to check function and closure.
6. The spring-loaded plungers can be adjusted using a Robertson screwdriver as described on page 10.
   - ➤ If closure is too tight, push in on the plunger and rotate clockwise to retract it.
   - ➤ If closure is too loose, push in and rotate the plunger counterclockwise to extend it.

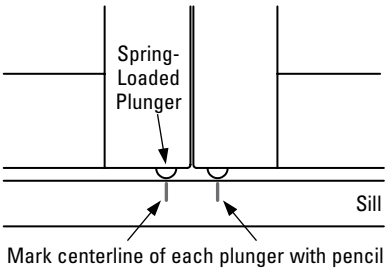

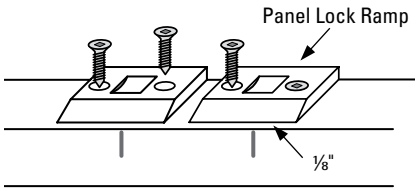

Install Magnets and Strike Plates (If Applicable)

If the shutter panels do not have panel locks, you may need to install magnets and strike plates if they are not already installed.

1. Review the diagrams below. Strike plates are installed at the top and bottom of all shutter panels. Magnets are installed behind the strike plates to the frame or sill.

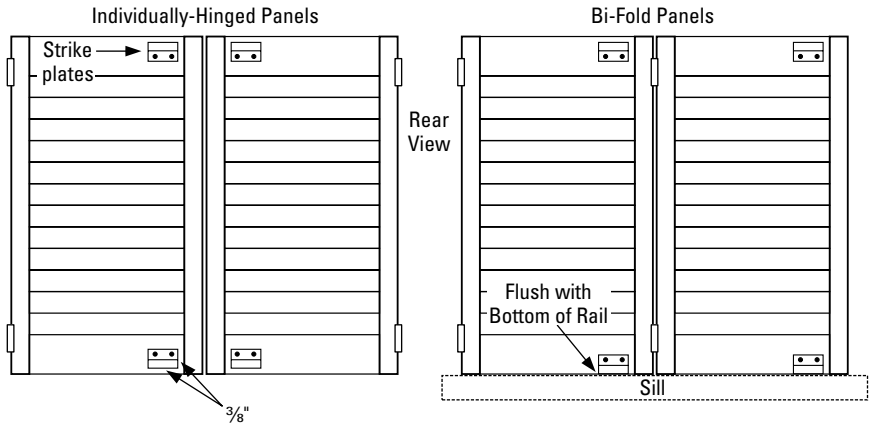

2. Using a pencil, mark the frame (top and bottom) where the stile meets the top and bottom rails, on the side where the shutter closes against the frame.
   - ➤ With three-sided frames, mark the sill at the bottom.
3. Install the magnets to the frame's light block so that the magnets are ⅜" in from the mark, toward the center of the shutter panel.
   - ➤ With three-sided frames, install the magnet to the sill ⅜" in from the mark. Align the magnet with the frame's light block.
4. Install the strike plates on the rear of the panels so that they align with the magnets. The corner of the plate should be ⅜" in from the stile and the edge of the top or bottom rail.
   - ➤ With three-sided frames, install the bottom plates flush with the edge of the bottom rail.
5. Close the shutter panels to check function and closure. Adjust magnet or strike plate position, if necessary.

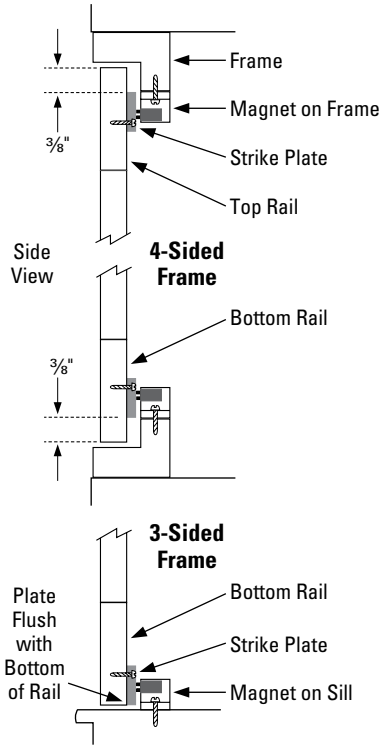

Touch-Up and Inspection

1. If you have not done so already, cap all screw holes with the provided button plugs.
2. If you have not done so already, on inside-mounted L-Frame applications, glue L-Frame Cover Strips to the front of the L-Frame to fill gaps between the frame and window jamb.
3. Apply sealant as needed to fill gaps between frames and window jambs or between mitered corners.

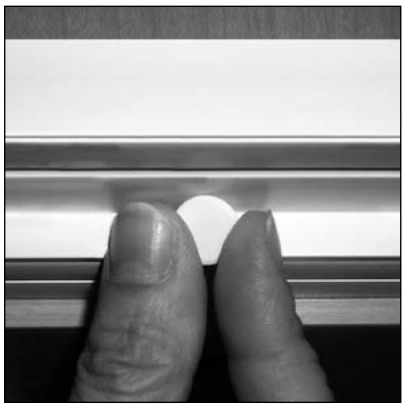



4. Wash any dirt or grease from the shutter using a clean cloth and mild detergent solution. Never use ammonia-based products.
5. Invite the home owner to inspect the installation. Give the home owner the LEVOLOR® PREMIER™ warranty card and explain the added protection provided by the Poly Shutters Promise, which covers shutter panel and frame members against warping, cracking, fading, chipping, peeling, or discoloration. Demonstrate proper operation of the shutters and show the customer the location of their individual authenticity plate serial number.

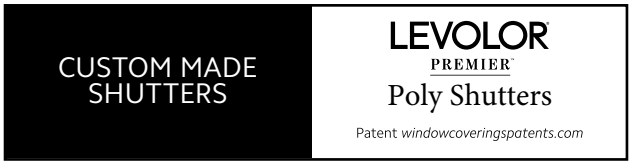

Operation

- Tilt the louvers by grasping one louver and moving it.
- Open the shutter panel by grasping the stile through open louvers and pulling out. *Do not* use the tilt bar to open the shutter panel.

IMPORTANT: To open the panels on a Bi-Fold track system, first close the louvers on all panels, then pull the panel closest to the stationary or pivot side outwards, followed by each successive panel, until the panel is fully stacked.

IMPORTANT: When using floor guides with a Bypass track system, use caution when operating panels to avoid panel damage where the guides contact the stiles.

Care

- Clean using a dry, soft feather duster, clean cloth, dust cloth or dusting mitt. A vacuum with the soft brush attachment can also be used.
- Poly Shutters may be washed using a mild detergent solution. Never use ammonia-based products.
- Ultrasonic cleaning or use of chemical solvents and scrubbing cleansers are not recommended. This will damage the product.
- Poly Shutters may accumulate static buildup during the shipping and installation process. Static can attract dust or smoke residue from candles or fireplaces. To reduce static cling and help repel dust, wipe the product with a soft, clean towel moistened with mild soap and water or a fabric dryer sheet. Never use ammonia-based products or abrasive cleaners as they may scratch or damage the surface.

Installation Troubleshooting

If your shade is not operating correctly:

- ➤ Review the Remote Support Documents and link to levolor.com/premier.
- ➤ Refer to the following troubleshooting procedures for specific solutions for your shade.

If questions remain, please contact LEVOLOR® PREMIER™ Consumer Support at **1-800-478-1538**.

Problem	Panels won't stay closed.
Solution	■ **Check the Panel Lock.** Check to ensure that the panel lock plunger is seated properly in the panel lock ramp. Possible problems include: ➤ The panel lock plunger is too far inside the panel. Adjust the plunger as described on page 9. ➤ The plunger does not sit in the "dip" in the panel lock ramp. Reposition the ramp, if necessary. Refer to steps 1 through 5 on page 42. ➤ Check plunger and stile cap alignment. The plunger is designed to lock into grooves on the stile cap to prevent unwanted rotation. If they are not aligned, the plunger will remain inside the cap. To adjust, use a Robertson screwdriver to rotate the plunger until it is properly aligned and able to extend beyond the stile cap. For more information, see page 9. ■ **Check the number of magnets.** If magnets are used for closure, check that there are two per panel, one at the top and one at the bottom. Refer to the magnet installation section on page 43. **NOTE:** Café style shutters use only *one* magnet per panel. ■ **Check magnet contact.** If magnets are used for closure, check that the magnets and strike plates have full contact with each other. Possible problems include: ➤ The magnet and strike plate are not aligned. The magnet or strike plate may need to be moved to achieve proper alignment. Refer to the magnet installation section on page 43. ➤ The magnet is at a slight angle, with only one side of the magnet touching the strike plate. Loosen one of the screws on the magnet to allow it to be straightened so that it makes full contact with the strike plate. ➤ The strike plate is not flush with the panel, so that only one side touches the magnet. Adjust the screws so that the strike plate becomes flush with the panel. ■ **Check panel load.** Load is created when the installation is not square. This places load on the stile, which can force the panel to open with a spring-back effect. If the load is excessive, the louvers may be difficult to close, as well. Possible solutions include: ➤ If load is detected with framed applications, tighten or loosen the installation screws on the frame. (*Do not* use shims.) Start by removing all the installation screws except for the top. Re-install the bottom installation screw until there is no load. Continue with all other installation screws, one at a time, checking for load after each one. ➤ If there is load on a bi-fold panel, remove the second bi-fold panel and resolve the problem with the first hinged panel as described above. Then re-attach the second panel and check that the problem has been resolved. ➤ If load is detected with unframed applications, shim the hinges to square the panels. Remove all hinge pins except for the top and bottom. Shim those hinges as needed until the problem is resolved. Continue with the other hinges, one at a time, checking for load after each one. ■ **Check for obstructions that prevent panels from closing.** Possible problems include: ➤ Window cranks can prevent panels from closing. Take the crank off the rotator and see if the panel is still obstructed. If the panel closes, replacing the window crank with a T-crank can often solve the problem. Otherwise, build-out may be required to add clearance. For panels without a frame, an extension hinge may be used to bring the panel into the room an extra ⅝". ➤ Window locks are other possible obstructions. Add clearance as described above. ➤ Patio door handles can prevent louvers from opening. If a handle stops a panel from closing, the shutter *must* be built out. ➤ Bowed sills or casements can prevent inside-mounted shutter panels from closing if the narrowest height and width measurements were not ordered. Double-check the inside measurements and compare them with the measurements ordered and received. (continued on next page)

Problem	Panels won't stay closed. (continued)
Solution	■ **Check for a twisted panel.** ➤ Panel stiles can sometimes be twisted by weight leaned against it or by extreme heat. Fortunately, the Poly Shuttters material can be "tweaked" back to its original shape with gentle force. To do this, use your hand to support the middle of the panel's outside stile and bend the top or bottom back into position until the panel remains closed.
Problem	Panels are too tight.
Solution	■ **Check that the frame is installed properly.** If the frame is not installed correctly, it may cause the inside opening of the frame to be too narrow at a specific point, causing the panels to be too tight. To check if the installation screws have been tightened the correct amount, measure the top or bottom frame width and compare it to the width where the panel appears to be too tight. Adjust the installation screws to square the frame. ■ **Check that the panel is in the correct opening.** When multiple windows are of similar size, panels can sometimes be placed into the wrong opening or with the incorrect panel grouping. Check the labels and order form instructions to ensure that the panels are in the correct opening and with the correct panel group. ■ **Traditional Z-Frame or Bullnose Z-Frame with rubber flex:** remove the rubber flex from one side of the frame. If the opening is smaller than expected and installation screws do not pull the frame straight, it may be necessary to remove the rubber flex from the back of one or more sides of the frame. This can be done easily and safely by making a small cut into the rubber flex material at one end of the frame, then peeling the rubber flex off the frame.
Problem	The track system panels drift.
Solution	■ If Bi-Fold or Bypass panels do not stay in place due to out-of-square openings or other factors, a Friction Brake may be installed on one or more track system carriers to provide slight resistance and prevent panel drift. **1.** Align the friction brake so it is parallel to the track, and press open end of notch partially onto the carrier stem with fingers. **2.** Using needle nose pliers, pinch the back two tabs while pushing the friction brake forward onto the carrier stem. **3.** Rotate the friction brake clockwise to increase to desired amount of resistance. *Do not* over-tighten. 

Problem	The damper spring in Controlled Close for Bypass disengages.
Solution	If the spring on the actuator doesn't engage with the trigger, it will need to be moved over. Carefully use your finger to move the spring back over to the other sides. 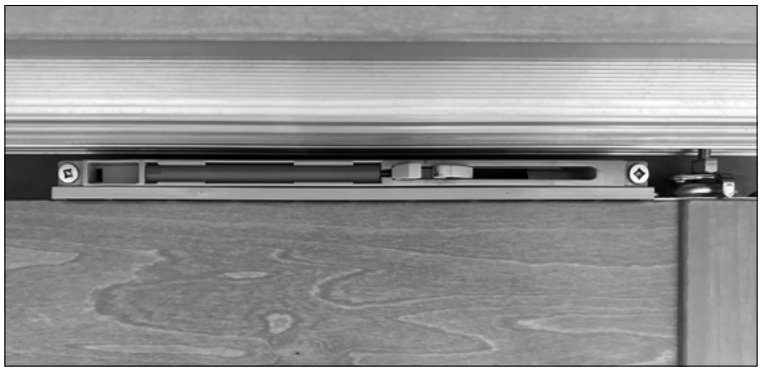 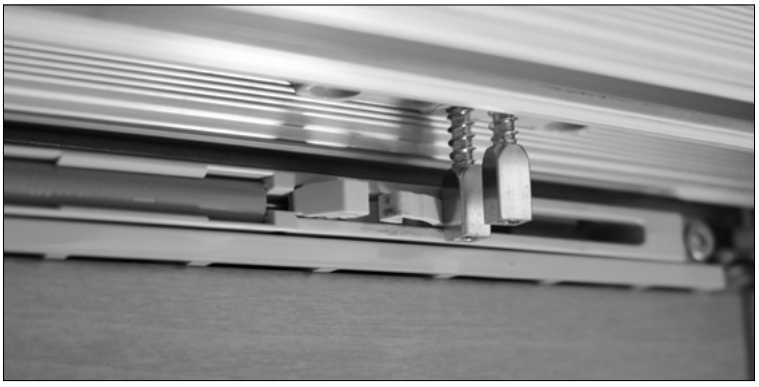 

Problem	Louvers are not working properly.

Solution

- **Check panel load.** Review the procedures at the bottom of page 41.
- **Check connectors.** With traditional front tilt shutters, connectors attach the louvers to the tilt bar.
  - ➤ Duralink™ cufflink connectors attach the louvers to the tilt bar at the front of the panel. Check that the connectors are securely attached. Snap them back into place if they are detached.

    IMPORTANT: To ensure the long life of shutters, the front tilt bar should not be used to open the panel.
  - ➤ With rear tilt bars, rear connectors attach the louvers to the tilt bar at the back of the panel. Check that the connectors are securely attached.
- **Replace Duralink cufflink connectors (front tilt).** The following instructions explain how to replace the cufflinks:

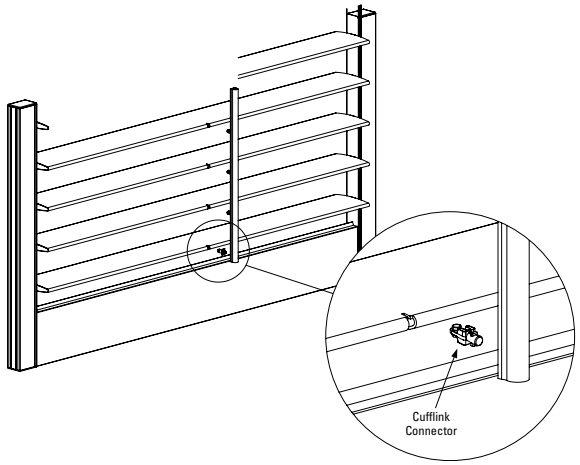

1. Pull the tilt bar with the broken cufflinks from the louvers, then label top of tilt bar for easy identification when reattaching to shutter.
2. To remove the tilt bar, grasp the louver that is connected nearest the top of the tilt bar. Pull on the tilt bar at the top of the louver section until the first connector is no longer secured to the louver (see Figure 1).
3. Continue down the tilt bar, repeating step 2 until all connectors are no longer attached to the louvers (see Figure 2).



Figure 1

4. If a connector is completely broken, part of the connector will remain in the back of the tilt bar, with the other part of the connector in the louver. Rotate each damaged or broken connector 90° by hand or with pliers, then pull to remove from the back of the tilt bar and discard (see Figures 3 and 4).

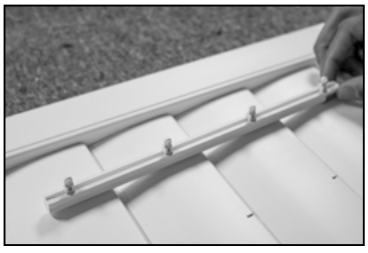

Figure 2



Figure 3

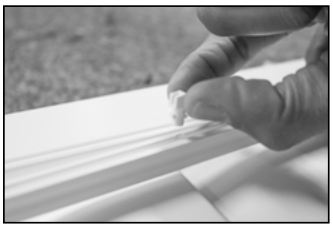

Figure 4

(continued on next page)

Problem	Louvers are not working properly. (continued)

Solution

5. To remove the portion of the connector in the louver, unbend a large paper clip. Feed one end of the paperclip between the connector and louver to pull the remaining portion of the connector out (see Figure 5).

NOTE: A pair of needle nose pliers can also be used to better grip and pull the paperclip, but it's important to not damage the louver or louver notch during this process.

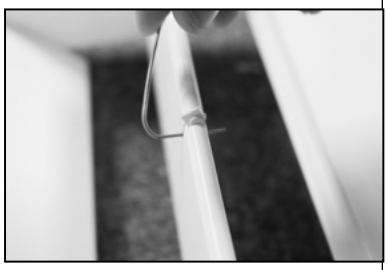

Figure 5

6. Turn the top of the tilt bar so it is oriented to the top of the shutter.

7. Insert a new connector into the tilt bar. Push the new connector into the tilt bar and rotate it 90° until the knuckles on the shank are perpendicular to the tilt bar.

8. To reattach the tilt bar, rotate all the louvers in the panel or louver section so they are in the horizontal/open option. Orient the tilt bar so the top connector will correspond to the notch in the top louver.

9. Grasp the top louver and keep it horizontal. Push until the connector is fully seated. Repeat this step until all the louvers in the panels have been connected to the tilt bar (see Figure 6).



Figure 6

10. Replace rear tilt bar connectors

1. Remove the broken connector(s).

2. Snap the new connector(s) into the rear tilt bar.

3. After all the broken connectors have been replaced, connect the tilt bar to the louvers by snapping the connectors back onto the ends of the louvers.

4. Replace the tilt bar. Insert the connectors into the louvers by holding the louvers in place and firmly pressing the connector into the notch on the louver.

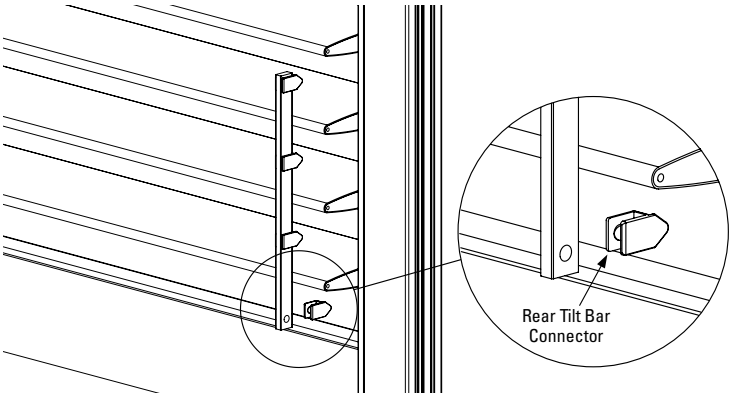

Problem	The mitered frame corners are not flush.
Solution	■ **Check installation screw.** One of the frames might have a slight bow causing the mitered joint to be raised. Retract the installation screw nearest to the miter. Slightly angle the screw away from the window and hold the frame flush as you secure the frame.
Problem	The shutter is discoloring.
Solution	■ **Check for residue build-up.** The poly shutters material has UV stabilizers to prevent discoloring. Any situation of discoloration is a direct result of residue from a cleaner or natural build-up (smoke, dust or oil furnace). Clean the shutter with soap and water. Never use ammonia-based products.
Problem	The shutter is scratched.
Solution	■ **Remove scratches.** Scotch-Brite™ 7448 light gray hand pads can be used to remove minor scratches. Gently rub the Scotch-Brite pad over the scratch in the direction of the extrusion. Apply minimal pressure when rubbing to avoid dulling the finish. Using very light pressure, carefully blend the repair area into the surrounding material. The entire piece may need to be treated. ■ **Remove deeper scratches.** If a scratch cannot be removed using Scotch-Brite, a more aggressive approach may be required. Start with 1200 grit wet or dry sandpaper first, and then finish with the Scotch-Brite 7448 pad to blend.

Operating Automated Smart Shutters

Now that you have completed your shutter installation, you are ready to program your Automated Smart Shutters.

Connect the Power Source

NOTE: When power is connected to the motor, a green LED inside the control button housing will flash to indicate the louvers are ready for operation.

Remove the Battery Cover

NOTE: Automated Smart shutters with a divider rail or split tilt will have two battery wands, one in the top rail and one in the bottom rail.

- Remove the battery cover from the top and/or bottom rail by sliding in direction of the unlock icon indicated on the battery cover.

CAUTION: When removing the battery cover, use two hands to prevent the battery cover and wand from falling.

- If you have the Battery Wand, see "Plug the Power Cable into the Battery Wand" on page 48.
- If you have the Rechargeable Battery Wand, refer to "Install the Rechargeable Battery Wand into the Battery Mount." on page 47

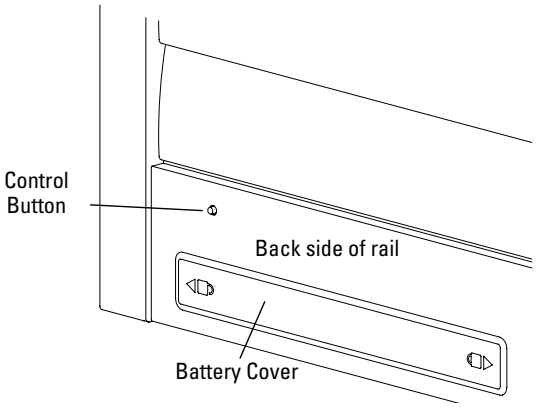

Rechargeable Battery Wand

The mount for the rechargeable battery wand comes permanently installed inside the battery panel, attached to the battery cover. You will need to install the rechargeable battery wand into its mount to power the shutter.

Install the Rechargeable Battery Wand into the Battery Mount.

- The rechargeable battery wand ships fully charged, so it is ready to install out of the package. However, if you are using a spare battery wand, make sure to fully charge it.

1. Locate the power cable inside the rail and plug it into the rechargeable battery mount.
2. Match the direction of the arrow on the underside of the rechargeable battery wand with the arrow on the rechargeable battery mount.

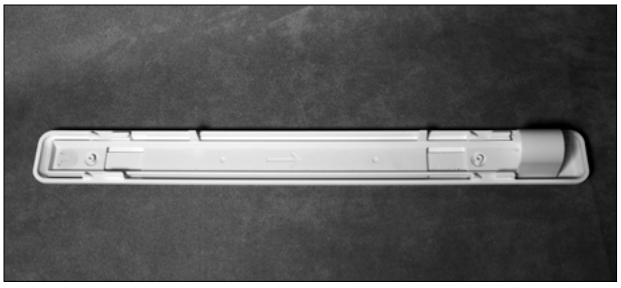

3. Insert the nose of the rechargeable battery wand into the cavity of the battery mount.



4. Push the rechargeable battery wand flush into the mount until the battery snaps into place.

5. Insert the battery cover with attached rechargeable battery wand and mount, into the rail and secure it by sliding in the direction of the lock icon indicated on the battery cover.



CAUTION: Failing to insert wand properly may cause it to fall out of the mount, posing an injury risk and potentially damaging the wand. Additionally, when mounting on a door, closing the door with excess force may cause battery wand to dislodge from the mount, also posing an injury risk and possibly damaging the wand.

Battery Wand

Plug the Power Cable into the Battery Wand

- Locate the power cable inside the rail and plug it into the socket on the battery wand.
- Place the battery pack into the clip on the back of the battery cover.
- Insert the battery cover into the rail and secure it by sliding in the direction of the lock icon indicated on the battery cover.

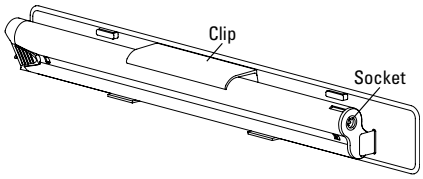

NOTE: On Bypass Track installations, refer to the installation steps on page 24.

Testing the Louver Section

Testing the louver section with the control button will allow you to ensure that the motor and power source are working correctly.

- Tilt louvers open by hand.
- Press the control button on the back side of the rail to test operation. If the louvers do not operate, see "Installation Troubleshooting" on page 47.
- The control button can also be used in combination with the App for control of advanced shade functions and home access. Open the App, then press and hold the control button to see a list of available functions. For more information, see "Operating the App and Remote" on page 49.

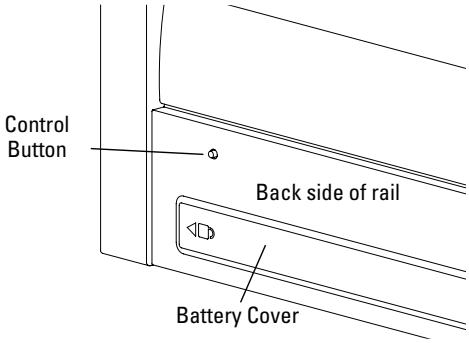

Coupled Panels

Coupled panels will have couplers in the stiles where the two panels meet to transfer the louver rotation from the panel with the motor to the adjoining panel. The couplers are spring-loaded, so they will recess into the stiles when the panels are closed. Make sure the couplers are aligned when closing the panels to ensure proper louver rotation.

NOTE: On Bypass Track installations, refer back to the installation steps on page 24.

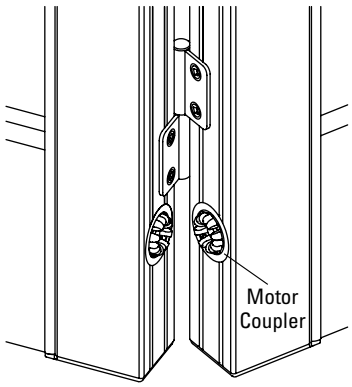

Operating the LEVOLOR® PREMIER™ App and Remote

Syncing and Programming Your Remote

- Activate the remote by pulling both plastic tabs from the back battery compartment.
- Download the LEVOLOR PREMIER App for your smartphone or tablet at getlpapp.com.
- Open the LEVOLOR PREMIER App and follow the steps to set up your new shades and remote.
- Use the LEVOLOR PREMIER App to program and manage your remote(s) as accessories.
- For more details, refer to the Remote Control Guide found on levolor.com/premier..

Basic Operation

- Wake up the remote by picking it up or pressing ■ STOP.
- Press group number(s) 1, 2, 3, 4, 5, and/or 6 to select one or more groups. Selected group numbers light up white on the remote.
- Press selected group number(s) 1, 2, 3, 4, 5 and/or 6 a second time to deselect one or more groups. Deselected group numbers are not lit.

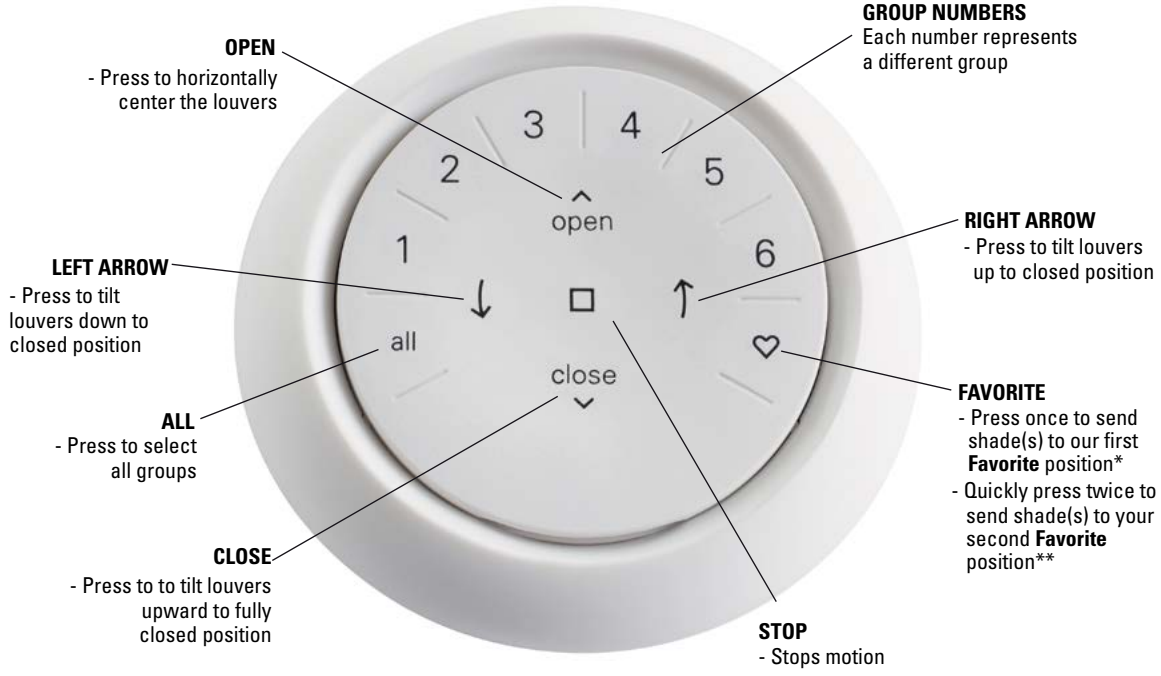

* The default first **Favorite** position is the front shade(s) at 50% open with full view-through.
Both **Favorite positions can be updated in the LEVOLOR PREMIER App > Shade Settings.

Further Operation and Programming Information

LEVOLOR PREMIER App

The LEVOLOR PREMIER App is required to program Automated Smart Shades, remotes, and gateways. The App is compatible with Apple® and Android™ smartphones and tablets. For more information regarding setup and operation using the LEVOLOR PREMIER App, refer to levolor.com/premier.

Gateway

The gateway is used to control shades in larger projects as well as integrate automated Smart Shades with third-party integration systems. For information regarding programming of gateways, refer to the Gateway Guide on levolor.com/premier.

Remote

For more information regarding operation and programming of the remote, refer to the Remote Control Guide on levolor.com/premier

Resetting the Shade, If Necessary

If you need to reset a shade's travel limits:

Calibration Reset

The calibration reset is used to recalibrate the shade's travel limits. This action is performed in the LEVOLOR PREMIER App.

- Select Calibrate Shade in the Advanced Options section of the Shade Settings menu in the LEVOLOR PREMIER App.
- The shade will move to its top limit, then finish in the closed position. When the shade stops moving, calibration is complete.

Resetting Shade Programming

The LEVOLOR PREMIER App may be used to modify or reset any shade programming to remotes and gateways. Shades may be added to or removed from Rooms in the App at any time. If necessary, shades may also be deleted from the LEVOLOR PREMIER App in the Advanced Options section of the Shade Settings menu.

Electronic Limit Adjustments

Electronic limits are set at the factory and normally do not require readjustment. For window treatments that may need additional adjustment or to set custom limit positions, go to Shade Settings in the LEVOLOR PREMIER App to adjust limits.

Automated Smart Shades Troubleshooting

If your shutter is not operating correctly:

- ➤ Review the Remote Support Documents and link to levolor.com/premier.
- ➤ Refer to the following troubleshooting procedures for specific solutions for your shade.

If questions remain, please contact LEVOLOR® PREMIER™ Consumer Support at **1-800-478-1538**.

Problem	The louvers do not operate using the control button.
Solution	Unplug the power cable from the motor, then plug it back in. A green LED light inside the control button housing should flash to indicate the motor has power. Check that the batteries in the battery wand are correctly inserted and are fresh or check that the Rechargeable Battery Wand is charged. Check that the springs inside the cap of the alkaline battery wand have not been compressed too far so they do not engage with the batteries. Gently pull the ends of the springs outward to extend them, if necessary. Check that the alkaline battery wand is securely connected to the power cable and the cables are not pinched or caught in the rail. Check that the Rechargeable Battery Wand mount is securely connected to the power cable in the mount. Use a tool, such as a screw driver or pen to push the control button located slightly below the surface of the rail to see if there is power. In order to minimize the occurrences of the end cap fuse blowing during the installation process, *do not* use a metal object to remove the sticker from the barrel connector port. In the event that the fuse in the end cap has been blown, the battery wand will no longer provide power to the automated window treatment. ■ Steps to check if the fuse has been blown include: ➤ Swap the battery wand with an alternate battery wand and try to operate the shutter. ➤ Swap the end cap of the battery wand with an alternative end cap and try to operate the shutter. **CAUTION:** *Do not* attempt to check the voltage of the battery wand with a voltage meter. This will blow the fuse.
Problem	The louver section is not responding to the remote.
Solution	**IMPORTANT:** A shutter will not operate until it is joined to a group. Check that the correct group number is selected. The LED on that group number will light up. You can also check which group number the shade is joined to on the remote in the LEVOLOR PREMIER App. You can find this under MORE > ACCESSORIES in the app. Check if the batteries need to be replaced. If batteries are running low, the numbered groups on the remote will begin to illuminate in sequence after each button press, similar to the action seen when syncing a remote. In either case, the batteries need to be replaced. The remote takes two CR2032 batteries.
Problem	The louvers are tilting slowly or do not tilt completely.
Solution	The batteries may be low in the battery wand. Replace the batteries. The Rechargeable Battery Wand may need to be recharged. Recharge the battery wand. Check that the battery wand is securely connected to the power cable, and the cables are not pinched or caught in the rail. The louver section may need to be reset. Refer to "Install the Rechargeable Battery Wand into the Battery Mount." on page 47.
Problem	The louvers in one panel (or louver section) tilt in the opposite direction of another panel (or louver section) when using the remote.
Solution	If some of the louvers are moving in the opposite direction from other louvers in a panel or opening, the motor in that section may need to be replaced. Contact Customer Service to issue a repair.

Problem	Louvers do not have full range of motion when performing the louver function reset.
Solution	Check for external obstructions such as window handles or trim. Ensure that all louver end caps are fully seated in the louvers. Try manually operating the louvers. If the louvers can be manually operated through the full range of motion, the motor will need to be replaced. If the louvers can not be manually operated through the full range of motion, and there are no external obstructions, there is an internal issue that will require repair.
Problem	Couplers are not engaging on coupled panels.
Solution	Vertical alignment is critical to achieve coupler alignment. Check the panel alignment to ensure that the couplers are at equal heights, and that the gap between panels is not too wide for the couplers to engage. Refer to panel alignment instructions on page 9. Check if the coupler cover is pushed inside the stile. Gently pull the coupler cover out and realign so that it sits flush with the stile. Check if the coupler is caught in the retracted position. If it's caught retracted, the coupler should be pushed in and released to adjust back to the extended position. It should be in the extended position on both the motor and coupled panels.
Problem	Panels are coupled, but the louvers on the automated panel are lagging behind the louvers on the non-automated panel.
Solution	Check if the louvers on the non-automated panel tilt before the louvers on the automated panel. If they are moving before the automated panel, there may be a failure inside the motor assembly. Contact Consumer Service to issue a repair. See "Installation Troubleshooting" on page 47.
Problem	The panels are coupled, and the louvers on the non-automated panels have little to no tension.
Solution	All Poly Shutters Smart Shade Automation panels are built without a tension rod, allowing the louvers in the non-automated panel to move very freely. There will be little to no tension, unless the panels are closed and the couplers are engaged.
Problem	The LED light in the control button housing signals 8 red blinks.
Solution	This is the low battery indicator. Replace the batteries in the alkaline battery wand or recharge the rechargeable battery wand..
Problem	Batteries in the battery wand need to be replaced.
Solution	Replace the batteries in the battery wand. Squeeze the cap latch to release the cap and remove the cap from the battery wand. Install the batteries according to the instructions on the battery wand label. Press the cap on until it latches. **NOTE:** LEVOLOR® PREMIER™ recommends AA alkaline batteries for use with our battery-powered shades. These will provide more than one year of operation, depending on usage. Lithium and rechargeable batteries are not recommended. 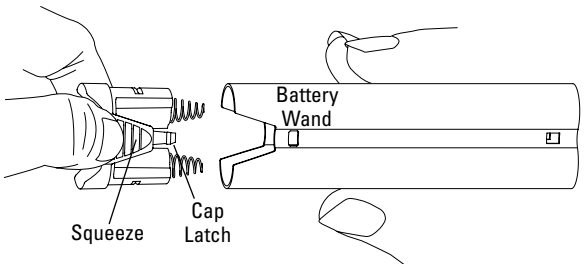

Problem	The battery is charged but the shutter does not operate.
Solution	If your rechargeable battery wand is charged but not working, it may be due to its physical location in your window. The rechargeable battery wand can operate in temperatures up to 176°F (80°C). If the temperature in your window exceeds this, its safety feature will shut the battery off temporarily. The battery will turn back on once the temperature lowers into the operable range.
Problem	Rechargeable battery wand needs recharging.
Solution	There are two methods for charging the rechargeable battery wand — the dual charging station or the single charger. **CAUTION:** The rechargeable battery wand can only be charged with these LEVOLOR® PREMIER™ provided charging options. Attempting to charge battery wands with an alternative charger may result in permanent damage. **Removing the Rechargeable Battery Wand from the Mount** ■ The battery wand is located inside the shutter panel, attached to the battery cover. Remove the battery cover from the shutter panel. See page 47 for instructions. To safely remove the rechargeable battery wand from your shade, grasp the end of the battery wand that is furthest away from the power socket. **CAUTION:** Grasp the wand firmly prior to removal. ■ Using the indentation on the end of the battery wand, use your index finger to pull the battery out of the mount. **NOTE:** The mount should remain installed and plugged into the shade cable during this process. You will simply remove the wand from the mount. 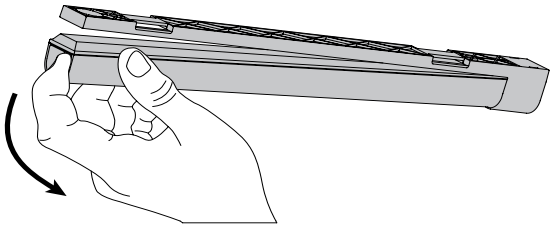 **Recharging Via the Dual Charging Station** ■ Plug the dual charging station into a standard AC outlet. ■ Insert the nose of the rechargeable battery wand into one of the slots of the dual charging station. ■ The battery will firmly snap into place. A red light indicator on the front of the charging station will turn on when the battery wand has been properly inserted and being charged. ■ Once the battery has been fully recharged, the red light indicator will turn green. Charging may take up to three hours, depending on your battery level. ■ Remove the battery wand from the charger. 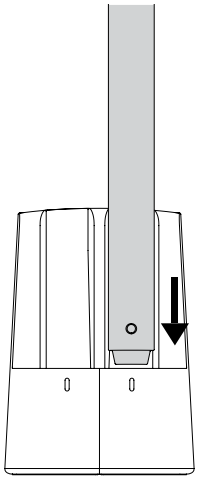

Problem	Rechargeable battery needs recharging (continued).

Solution

Recharging Via the Single Charger

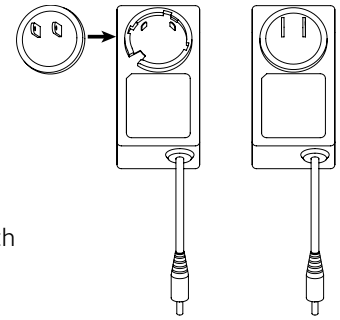

The battery wand is located inside the shutter panel, attached to the battery cover. Remove the rechargeable battery wand from the mount, or insert the single charger cable without removing from the shading.

- Attach the plug adapter to the charger.
- Plug the charger into the standard AC outlet.
- Attach the female end of the charging cable to the single charger. If additional length is required to reach the battery, attach additional charging cables as needed.
- Insert and twist cables together to ensure they do not accidentally become unplugged during charging.
- Plug the charging cable into the charging outlet on the rechargeable battery wand.

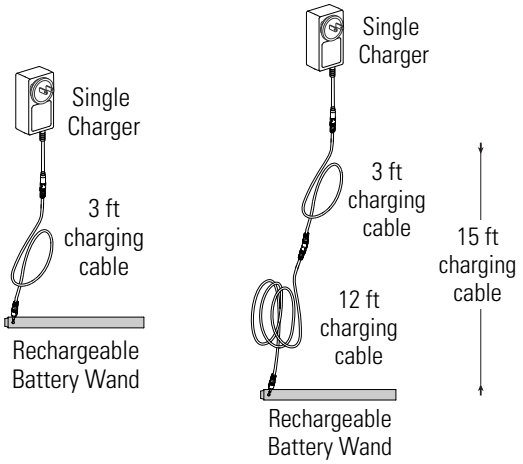

- The charging outlet is near the nose of the wand. Plug the charger into a standard AC outlet.
- A red light indicator confirms the battery wand is properly inserted and is charging.

  CAUTION: Do not attempt to plug the charging cable into the battery mount's power socket. Doing so will not only fail to charge the battery wand but could possibly cause damage to both the single charger and the battery mount.

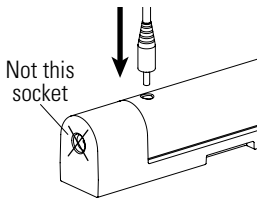

- Once the battery has been fully recharged, the red light indicator will turn green. Charging may take up to two hours, depending on your battery level.
- Remove the charging cable from the battery wand.

Reinserting the Rechargeable Battery Wand into the Mount

- Match the direction of the arrow on the underside of the battery wand with the arrow on the battery mount.
- Insert the nose of the battery wand into the cavity of the battery mount.
- Push the battery wand flush into the mount until the battery snaps into place.

Problem	The battery wand will not fit inside the battery cover.
Solution	Poly Shutters Automated Smart Shutters use the 12V battery wand, which holds 8 AA batteries. Please ensure that you are not using the 18V battery wand, which holds 12 AA batteries. Only the 12V battery wand will fit into the battery cover. The illustrations below show the correct orientation for clipping the battery wand into the battery cover. When the battery wand is oriented correctly, the clear panel on the side of the battery wand should not be visible. 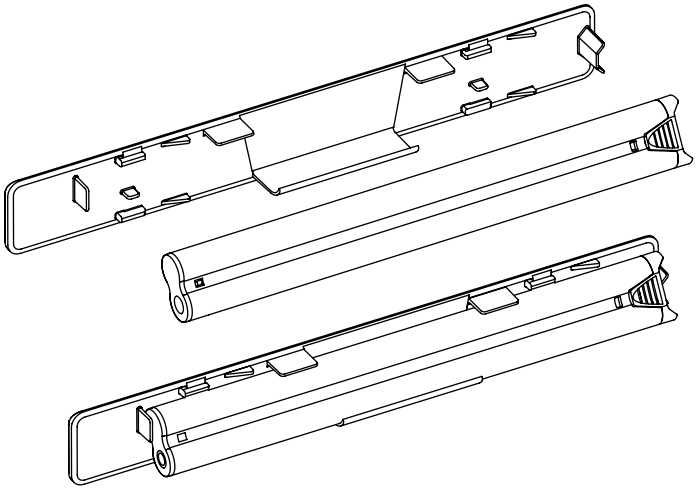 Please note that the battery wand sits at an angle when clipped in correctly.

DECLARATIONS

FCC Statement

NOTE: This equipment has been tested and found to comply with the limits for a Class B digital device, pursuant to part 15 of the FCC Rules. These limits are designed to provide reasonable protection against harmful interference in a residential installation. This equipment generates, uses and can radiate radio frequency energy and, if not installed and used in accordance with the instructions, may cause harmful interference to radio communications. However, there is no guarantee that interference will not occur in a particular installation. If this equipment does cause harmful interference to radio or television reception, which can be determined by turning the equipment off and on, the user is encouraged to try to correct the interference by one or more of the following measures:

- Reorient or relocate the receiving antenna.
- Increase the separation between the equipment and receiver.
- Connect the equipment into an outlet on a circuit different from that to which the receiver is connected.
- Consult the dealer or an experienced radio/TV technician for help.

NOTE: Changes or modifications not expressly approved by the manufacturer responsible for compliance could void the user's authority to operate the equipment.

Responsible party:
LEVOLOR® PREMIER™
1 Duette Way
Broomfield, CO 80020
USA
levolor.com/premier

ISED Canada Compliance Statement

This device contains licence-exempt transmitter(s)/receiver(s) that comply with Innovation, Science and Economic Development Canada's licence exempt RSS(s).

This Class B digital apparatus complies with Canadian ICES-003

Operation is subject to the following two conditions: (1) This device may not cause interference. (2) This device must accept any interference, including interference that may cause undesired operation of the device.

Cet appareil contient des émetteurs/récepteurs sans licence qui sont conformes aux RSS sans licenced'Innovation, Sciences et Développement économique Canada.

Cet appareil numérique de la classe B est conforme à la norme NMB-003 du Canada.

Le présent appareil est conforme aux CNR d'ISDE Canada applicables aux appareils radio exempts de licence. L'exploitation est autorisée aux deux conditions suivantes : (1) l'appareil ne doit pas produire de brouillage, et (2) l'appareil doit accepter tout brouillage radioélectrique subi, même si le brouillage est susceptible d'en compromettre le fonctionnement.

CE and UKCA Compliance Statement

LEVOLOR PREMIER, One Duette Way, Broomfield, CO 80020, USA

Hunter Douglas hereby declares that the PV37 is in compliance with the essential requirements and other relevant provisions of Electromagnetic Compatibility (EMC) Directive 2014/30/EU and Radio Equipment Directive (RED) 2014/53/EU. A copy of the DoC can be obtained upon request at levolor.com/premier.

10-Year Limited Warranty

LEVOLOR® PREMIER™

COVERED

by a 10-Year
Limited Warranty

- LEVOLOR® PREMIER™ products are covered for defects in materials, workmanship or failure to operate for 10 years from the date of purchase (unless a shorter period is provided below), provided that the original retail purchaser continues to own the product.
- All internal mechanisms.
- Fabric delamination.
- Components, brackets and operational cords.
- Repairs and/or replacements will be made with like or similar parts or products. Fabric style, color or components may vary depending on original purchase date.
- LEVOLOR PREMIER motorization components are covered for 5 years from the date of purchase.

NOT COVERED

by a 10-Year
Limited Warranty

- Any conditions caused by normal wear and tear.
- Abuse, accidents, misuse or alterations to the product.
- Exposure to the elements (sun damage, wind, water/moisture, salt air) and discoloration or fading over time.
- Normal maintenance associated with motors and related accessories including, but not limited to, recharging and replacement of batteries.
- Failure to follow our instructions with respect to measurement, proper installation, cleaning or maintenance.
- Shipping charges, cost of removal and reinstallation.

LEVOLOR PREMIER (or its licensed fabricator/distributor) will repair or replace the product or components found to be defective.

TO OBTAIN WARRANTY SERVICE:

- Contact your original dealer (place of purchase) for warranty assistance.
- Contact LEVOLOR PREMIER at 1-800-478-1538 for technical support, certain parts free of charge, for assistance in obtaining warranty service or for further explanation of our warranty.

NOTE: In no event shall LEVOLOR or its licensed fabricator/distributor be liable or responsible for incidental or consequential damages or for any other indirect damage, loss, cost or expense. Some states do not allow the exclusion or limitation of incidental or consequential damages, so the above exclusion or limitation may not apply to you. This warranty gives you specific legal rights, and you may also have other rights which vary from state to state.

Different warranty periods and terms apply for commercial products and applications.

LEVOLOR® PREMIER™

©2024 LEVOLOR, Inc. All Rights Reserved. All trademarks used herein are the property of LEVOLOR® or their respective owners.